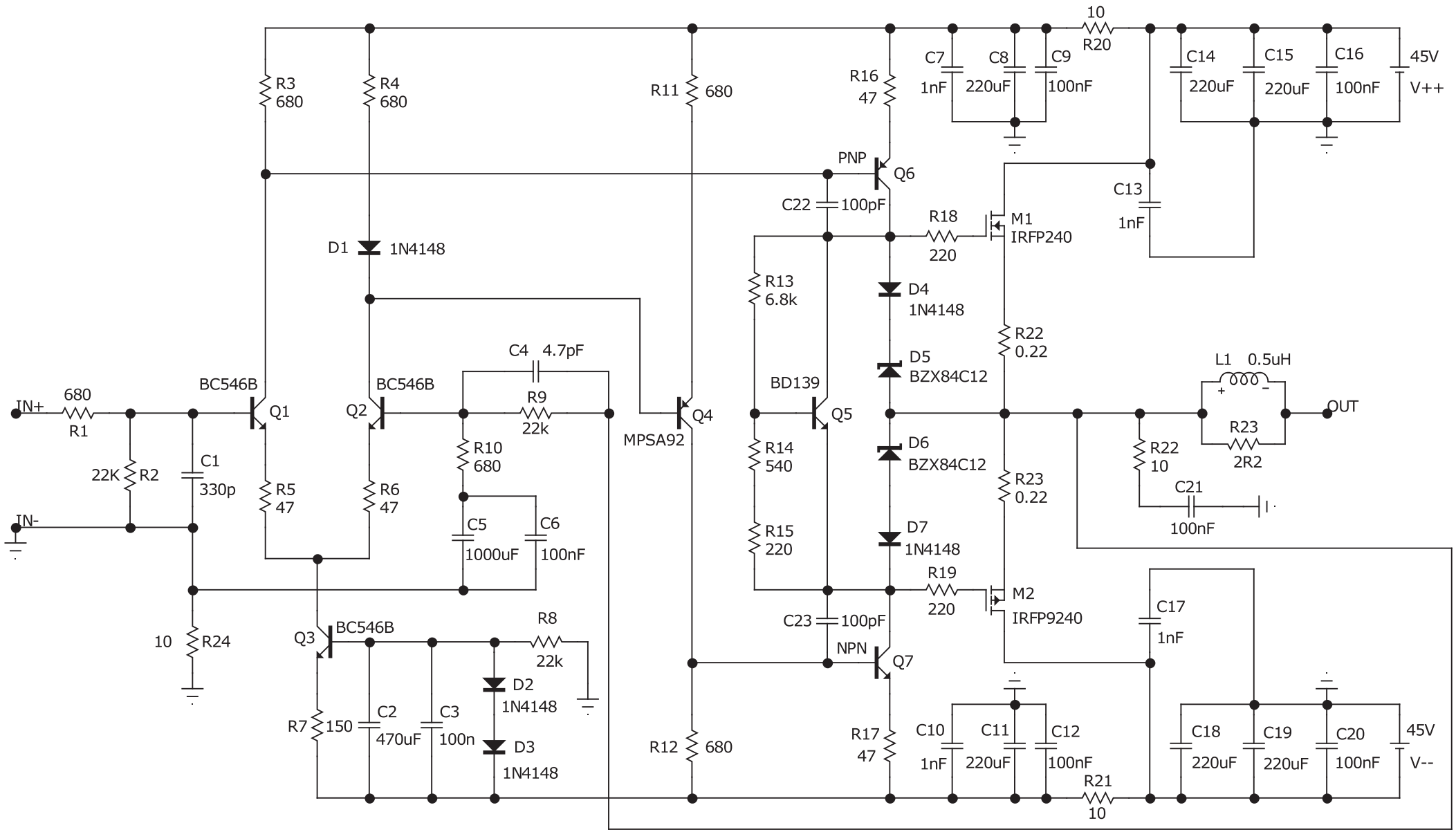
IN+
IN-
680
R1
22K
R2
C1
330p
BC546B
Q1
R5
47
BC546B
Q2
R6
47
R3
680
R4
680
D1
1N4148
C4
4.7pF
R9
22k
R10
680
C5
1000uF
C6
100nF
MPSA92
Q4
R11
680
R12
680
10
R24
Q3
BC546B
R7
150
C2
470uF
C3
100n
R8
22k
D2
1N4148
D3
1N4148
R16
47
PNP
Q6
C22
100pF
R13
6.8k
R14
540
R15
220
BD139
Q5
C23
100pF
NPN
Q7
R17
47
D4
1N4148
D5
BZX84C12
D6
BZX84C12
D7
1N4148
R18
220
M1
IRFP240
R19
220
M2
IRFP9240
R22
0.22
R23
0.22
C7
1nF
C8
220uF
C9
100nF
10
R20
C13
1nF
C14
220uF
C15
220uF
C16
100nF
45V
V++
L1
0.5uH
R23
2R2
OUT
R22
10
C21
100nF
C17
1nF
C10
1nF
C11
220uF
C12
100nF
R21
10
C18
220uF
C19
220uF
C20
100nF
45V
V--