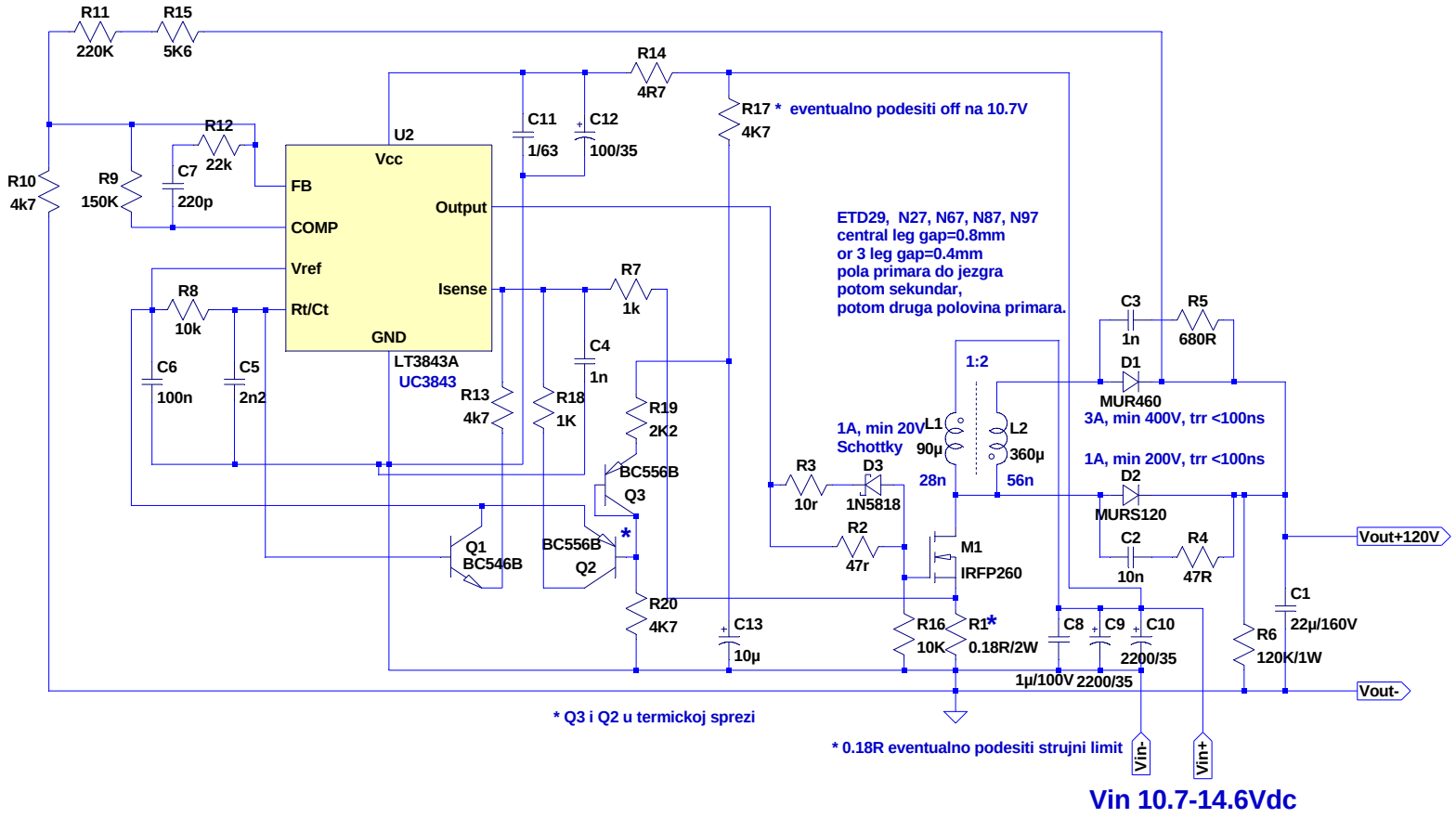

--- E:\Privremeno\Penz_fly\penz_flyback.asc ---