CONTENTS

SAFETY PRECAUTIONS 2
PERI-TV SOCKET 2
1 INTRODUCTION 2
2 SMALL SIGNAL PART WITH STV2248: 3
2.1 Vision IF Amplifier3 3
2.2 QSS Sound Circuit (QSS Versions) 3
2.3 AM Demodulator 3
2.4 FM Demodulator and Audio Amplifier (Mono Versions): 3
2.5 Video Switching 3
2.6 Synchronization Circuit 3
2.7 Chroma and Luminance Processing: 4
2.8 RGB output circuit 4
2.9 µ-Controller 4
3 TUNER 5
4 SOUND OUTPUT STAGE TDA2822 5
5 VERTICAL OUTPUT STAGE WITH TDA8174A 5
6 POWER SUPPLY (SMPS) 5
7 DISCRETE VIDEO AMPLIFIER 5
8 SERIAL ACCESS CMOS 8K EEPROM 24C08 6
9 SAW FILTERS 6
10 IC DESCRIPTIONS AND INTERNAL BLOCK DIAGRAM 6
10.1 ST92195 6-7
10.2 STV224X Video processor: 7
10.3 UV1315, UV1316, UV1336 8-9
10.4 TDA2822 9
10.5 TDA8174AW 9
10.6 UC3842/3 10
10.7 E²Eprom 24CO8 10
Saw filter's list 11
11 GENERAL BLOCK DIAGRAM 12
12 AK36 TITANIUM TELETEXT - Language Groups 13
13 AK36 CHASSIS MANUAL ADLUSTMENT PROCEDURE 14
14 SERVİCE ADJUSTMENTS 15-16
15 OPTION LIST 17
15.1 OP1 – Peripheral Options 17
15.2 OP2 – Reception Standard Options 17
15.3 OP3 – Video Options 17
15.4 OP4 – TV Features 18
15.5 OP5 – Channel Tables 18
15.6 TX1 – Teletext Options 18
16. TUNER SETTING 19
17 CIRCUIT DIAGRAM of VIDEO PRECESSOR 20
CIRCUIT DIAGRAM of SMPS 21
CIRCUIT DIAGRAM of MICRO CONTROLLER 22
CIRCUIT DIAGRAM of VIDEO 23
CIRCUIT DIAGRAM of DEFLECTION 24
CIRCUIT DIAGRAM of CRT 25
18 WAVEFORMS 20

DO NOT CHANGE ANY MODULE UNLESS THE SET IS SWITCHED OFF
The mains supply part of the switch mode power supply's transformer is live.
Use an isolating transformer.
The receiver complies with the safety requirements.

SAFETY PRECAUTIONS
The service of this TV set must be carried out by qualified persons only. Components marked with the warning symbol on the circuit diagram are critical for safety and must only be replaced with an identical component.
- Power resistor and fused resistors must be mounted in an identical manner to the original component.
- When servicing this TV, check that the EHT does not exceed 26kV.

TV set switched off:
Make short-circuit between HV-CRT clip and CRT ground layer.
Short C808 before changing IC841 or other components in primary side of the SMPS part.

Measurements:
Voltage readings and oscilloscope traces are measured under the following conditions:
Antenna signal's level is 60dB at the color bar pattern from the TV pattern generator. (100% white, 75% color saturation)
Brightness, contrast, and color are adjusted for normal picture performance.
Mains supply, 220VAC, 50Hz.

PERI-TV SOCKET

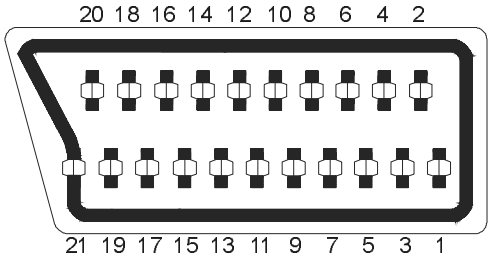

SCART 1 PINING

1 Audio right output	0.5Vrms / 1K
2 Audio right input	0.5Vrms / 10K
3 Audio left output	0.5Vrms / 1K
4 Ground AF	
5 Ground Blue	
6 Audio left input	0.5Vrms / 10K
7 Blue input	0.7Vpp / 75ohm
8 AV switching input	0-12VDC /10K
9 Ground Green	
10 -	
11 Green input	0.7Vpp / 75ohm
12 -	
13 Ground Red	
14 Ground Blanking	
15 Red input	0.7Vpp / 75ohm
16 Blanking input	0-0.4VDC, 1-3VDC / 75 Ohm
17 Ground CVBS output	
18 Ground CVBS input	
19 CVBS output	1Vpp / 75ohm
20 CVBS input	1Vpp / 75ohm
21 Ground	

1 INTRODUCTION

11AK36 is a 90° chassis capable of driving 14" tubes at the appropriate currents. The chassis is capable of operating in PAL, SECAM and NTSC standards. The sound system is capable of giving 3 watts RMS output into a load of 16 ohms. One page and US Closed Caption is also provided. The chassis is equipped with a 21 pin Eu-Scart connector.

2 SMALL SIGNAL PART WITH STV2248:

STV2248 video processor is essential for realizing all small signal functions for a color TV receiver.

2.1 Vision IF Amplifier3

The vision IF amplifier can demodulate signals with positive and negative modulation. The PLL demodulator is completely alignment-free. Although the VCO (Toko-coil) of the PLL circuit is external, yet the frequency is fixed to the required value by the original manufacturer thus the Toko-coil does not need to be adjusted manually. The setting of the various frequencies (38.9 or 45.75 MHz) can be made via changing the coil itself.

2.2 QSS Sound Circuit (QSS Versions)

The sound IF amplifier is similar to the vision IF amplifier and has an external AGC de-coupling capacitor. The single reference QSS mixer is realised by a multiplier. In this multiplier the SIF signal is converted to the inter-carrier frequency by mixing it with the regenerated picture carrier from the VCO. The mixer output signal is supplied to the output via a high-pass filter for attenuation of the residual video signals. With this system a high performance hi-fi stereo sound processing can be achieved. The AM sound demodulator is realised by a multiplier. The modulated sound IF signal is multiplied in phase with the limited SIF signal. The demodulator output signal is supplied to the output via a low-pass filter for attenuation of the carrier harmonics. The AM signal is supplied to the output via the volume control.

2.3. AM DEMODULATOR

The AM demodulated signal results from multiplying the input signal by itself, it is available on AM/FM output.

2.4 FM Demodulator and Audio Amplifier (Mono Versions):

The FM demodulator is realized as narrow-band PLL with external loop filter, which provides the necessary selectivity without using an external band-pass filter. To obtain a good selectivity a linear phase detector and constant input signal amplitude are required. For this reason the inter-carrier signal is internally supplied to the demodulator via a gain controlled amplifier and AGC circuit. The nominal frequency of the demodulator is tuned to the required frequency (4.5/ 5.5/6.0/6.5 MHz) by means of a calibration circuit that uses the clock frequency of the µ-controller/Teletext decoder as a reference. The setting to the wanted frequency is realized by means of the software. It can be read whether the PLL frequency is inside or outside the window and whether the PLL is in lock or not. With this information it is possible to make an automatic search system for the incoming sound frequency. This is realized by means of a software loop that alternate the demodulator to various frequencies, then select the frequency on which a lock condition has been found. De-emphasis output signal amplitude is independent of the TV standard and has the same value for a frequency deviation of ±25 kHz at the 4.5 MHz standard and for a deviation of ±50 kHz for the other standards. When the IF circuit is switched to positive modulation the internal signal on de-emphasis pin is automatically muted. The audio control circuit contains an audio switch and volume control. In the mono inter-carrier sound versions the Automatic Volume Leveling (AVL) function can be activated. The pin to which the external capacitor has to be connected depends on the IC version. For the 90° types the capacitor is connected to the EW output pin (pin 20). When the AVL is active it automatically stabilizes the audio output signal to a certain level.

2.5 Video Switching

The video processor (STV2248C) has three CVBS inputs and two RGB inputs. The first CVBS input is used for external CVBS from SCART 1, the second is used for either CVBS from FAV, and the third one is used for internal video. The selection between both external video inputs signals is realized by means of software switches.

2.6 Synchronization Circuit

The video processor (STV224X) performs the horizontal and vertical processing. The external horizontal deflection circuit is controlled via the Horizontal output pulse (HOUT). The vertical scanning is performed through an external ramp generator and a vertical power amplifier IC controlled by the Vertical output pulse (VOUT).
The main components of the deflection circuit are:

• PLL1: the first phase locked loop that locks the internal line frequency reference on the CVBS input signal. It is composed of an integrated VCO (12 MHz) that requires the chroma Reference frequency (4.43MHz or 3.58MHz crystal oscillator reference signal), a divider by 768, a line decoder, and a phase comparator.
• PLL2: The second phase locked loop that controls the phase of the horizontal output
(Compensation of horizontal deflection transistor storage time variation). Also the horizontal position adjustment is also performed in PLL2.
• A vertical pulse extractor.
• A vertical countdown system to generate all vertical windows (vertical synchronization window, frame blanking pulses, 50/ 60Hz identification window...).
• Automatic identification of 50/60Hz scanning.
• PLL1 time constant control.
• Noise detector, video identification circuits, and horizontal coincidence detector.
• Vertical output stage including de-interlace function, vertical position control.
• Vertical amplitude control voltage output (combined with chroma reference output and Xtal 1 indication).

2.7 Chroma and Luminance Processing:

The chroma decoder is able to demodulate PAL, NTSC and SECAM signals.
The decoder dedicated to PAL and NTSC sub-carrier is based on a synchronous demodulator, and an Xtal PLL locked on the phase reference signal (burst).
The SECAM demodulation is based on a PLL with automatic calibration loop.
The color standard identification is based on the burst recognition.
Automatic and forced modes can be selected through the I2C bus.
NTSC tint, and auto flesh are controlled through I2C bus.
Xtal PLL can handle up to 3 crystals to work in PAL M, PAL N and NTSC M for South America.
ACC an ACC overload control the chroma sub-carrier amplitude within 26dB range. Both ACC s are based on digital systems and do not need external capacitor.
All chroma filters are fully integrated and tuned via a PLL locked on Xtal VCO signal.
A second PLL is used for accurate fine-tuning of the SECAM bell filter. This tuning is achieved during the frame blanking. An external capacitor memorizes the bell filter tuning voltage.
A base-band chroma delay-line rebuilds the missing color line in SECAM and removes transmission phase errors in PAL.
The base-band chroma delay line is clocked with 6MHz signal provided by the horizontal scanning VCO.
The luminance processor is composed of a chroma trap filter, a luminance delay line, a peaking function with noise coring feature, a black stretch circuit.
Trap filter and luminance delay lines are achieved with the use of bi-quad integrated filters, auto-aligned via a master filter phase locked loop.

2.8 RGB output circuit:

The video processor performs the R, G, B processing.
There are three sources:

1. Y,U,V inputs (coming from luma part (Y output), and chroma decoder outputs (R-Y, B-Y outputs).
2. External R,G,B inputs from SCART (converted internally in Y,U,V), with also the possibility to input YUV signals from a DVD player, (YUV specification is Y=0.7 V PP , U= 0.7 V PP , V = 0.7V PP for 100% color bar).
3. Internal R,G,B inputs (for OSD and Teletext display)

The main functions of the video part are:

- Y,U,V inputs with integrated clamp loop, allowing a DC link with YUV outputs,
- External RGB inputs (RGB to YUV conversion), or direct YUV inputs,
- Y,U,V switches,
- Contrast, saturation, brightness controls,
- YUV to RGB matrix,
- OSD RGB input stages (with contrast control),
- RGB switches,
- APR function,
- DC adjustment of red and green channels,
- Drive adjustments (R, G, B gain),
- Digital automatic cut-off loop control,
- Manual cut-off capability with I2C adjustments,
- Half tone, oversize blanking, external insertion detection, blue screen,
- Blanking control and RGB output stages.

2.9 µ-Controller

The ST92195 is the micro-controller, which is required for a color TV receiver. ST92195D1 is the version with one page Teletext . The IC has the supply voltages of 5 V and they are mounted in PSDIP package with 56 pins.
µ-Controller has the following features

- Display of the program number, channel number, TV Standard, analogue values, sleep timer, parental control and mute is done by OSD
- Single LED for standby and on mode indication
- System configuration with service mode
- 3 level logic output for SECAM and Tuner band switching

3 TUNER

Either a PLL or a VST tuner is used as a tuner.
UV1316 (VHF/UHF) is used as a PLL tuner. For only PALM/N, NTSC M applications UV 1336 is used as the PLL tuner. UV 1315 (VHF/UHF) is used as a VST Tuner.

Channel coverage of UV1316:

BAND	OFF-AIR CHANNELS		CABLE CHANNELS	
	CHANNELS	FREQUENCY RANGE (MHz)	CHANNELS	FREQUENCY RANGE (MHz)
Low Band	E2 to C	48.25 to 82.25 (1)	S01 to S08	69.25 to 154.25
Mid Band	E5 to E12	175.25 to 224.25	S09 to S38	161.25 to 439.25
High Band	E21 to E69	471.25 to 855.25 (2)	S39 to S41	447.25 to 463.25

(1). Enough margin is available to tune down to 45.25 MHz.
(2). Enough margin is available to tune up to 863.25 MHz.

Noise	Typical	Max.	**Gain**	Min.	Typical	Max.
Low band	: 5dB	9dB	All channels	: 38dB	44dB	52dB
Mid band	: 5dB	9dB	Gain Taper (of-air channels)	:		8dB
High band	: 6dB	9dB				

Channel Coverage UV1336:

BAND	CHANNELS	FREQUENCY RANGE (MHz)
Low Band	2 to D	55.25 to 139.25
Mid Band	E to PP	145.25 to 391.25
High Band	QQQ to 69	397.25 to 801.25

Noise is typically 6dB for all channels. **Gain** is minimum 38dB and maximum 50dB for all channels.

Channel Coverage of UV1315:

BAND	OFF-AIR CHANNELS		CABLE CHANNELS	
	CHANNELS	FREQUENCY RANGE (MHz)	CHANNELS	FREQUENCY RANGE (MHz)
Low Band	E2 to C	48.25 to 82.25 (1)	S01 to S08	69.25 to 168.25
Mid Band	E5 to E12	175.25 to 224.25	S11 to S39	231.25 to 447.25
High Band	E21 to E69	471.25 to 855.25 (2)	S40 to S41	455.25 to 463.25

(1). Enough margin is available to tune down to 45.25 MHz.
(2). Enough margin is available to tune up to 863.25 MHz.

Noise	Typ.	Max.	**Gain**	Min.	Typ.	Max.
Low band	6dB	9dB	All Channels	38dB	44dB	50dB
Mid band	6dB	10dB	Gain Taper			8dB
High band	6dB	11dB	(off-air channels)			

4 SOUND OUTPUT STAGE TDA2822

TDA2822 is used as the AF output amplifier. It is supplied by +12VDC coming from a separate winding in the SMPS transformer. An output power of 3W (THD=10%) can be delivered into an 16 ohm load.

5 VERTICAL OUTPUT STAGE WITH TDA8174A

The TDA8174A is a power amplifier circuit for use in 90° and 110° colour deflection systems for 25 to 200 Hz field frequencies, and for 4 : 3 and 16 : 9 picture tubes.

6 POWER SUPPLY (SMPS)

The DC voltages required at various parts of the chassis are provided by an SMPS transformer controlled by the IC UC3842/3 which is designed for driving, controlling and protecting switching transistor of SMPS. The transformer produces 115V for FBT input, ±12V for audio output IC, S+5V and 8V for ST92195.

7 DISCRETE VIDEO AMPLIFIER

Three high voltage, high frequency transistor is used for RGB amplifier. This application works on fixed AC and DC gains.

8 SERIAL ACCESS CMOS 8K EEPROM 24C08

The 24C08 is a 8Kbit electrically erasable programmable memory (EEPROM), organized as 4 blocks of 256*08 bits. The memory is compatible with the I²C standard, two wire serial interface which uses a bi-directional data bus and serial clock.

9 SAW FILTERS

Saw filter type	**:**	**Model:**
G1975M	**:**	PAL B/G MONO
K2966M	**:**	PAL SECAM B/G/D/K/I MONO
J1981	**:**	PAL-I MONO
K2966M	**:**	PAL-SECAM B/G/D/K/I/I' MONO
K2962M	**:**	PAL-SECAM B/G/D/K/I/L/L' MONO
L9653	**:**	Secam L/L' audio
M1962M	**:**	PAL M/N NTSC M MONO

IC DESCRIPTIONS AND INTERNAL BLOCK DIAGRAM

- ST92195
- STV224X
- TUNER (UV1315, UV1316, UV1336)
- TDA2822
- TDA8174A
- UC3842/3
- 24C08
- SAW FILTERS

G1975M, K2966M, K2962M, M1962M

10.1 ST92195

The ST92195 is a member of the ST9+ family of micro-controllers, completely developed and produced by SGS-THOMSON Microelectronics using a proprietary n-well HCMOS process. The nucleus of the ST92195 is the advanced Core, which includes the Central Processing Unit (CPU), the ALU, the Register File and the interrupt controller. The Core has independent memory and register buses to add to the efficiency of the code. A set of on-chip peripherals form a complete sys-tem for TV set and VCR applications:

- Voltage Synthesis
- VPS/WSS Slicer
- Teletext Slicer
- Teletext Display RAM
- OSD

Additional peripherals include a watchdog timer, a serial peripheral interface (SPI), a 16-bit timer and an A/D converter.

MICROCONTROLLER PIN DESCRIPTION

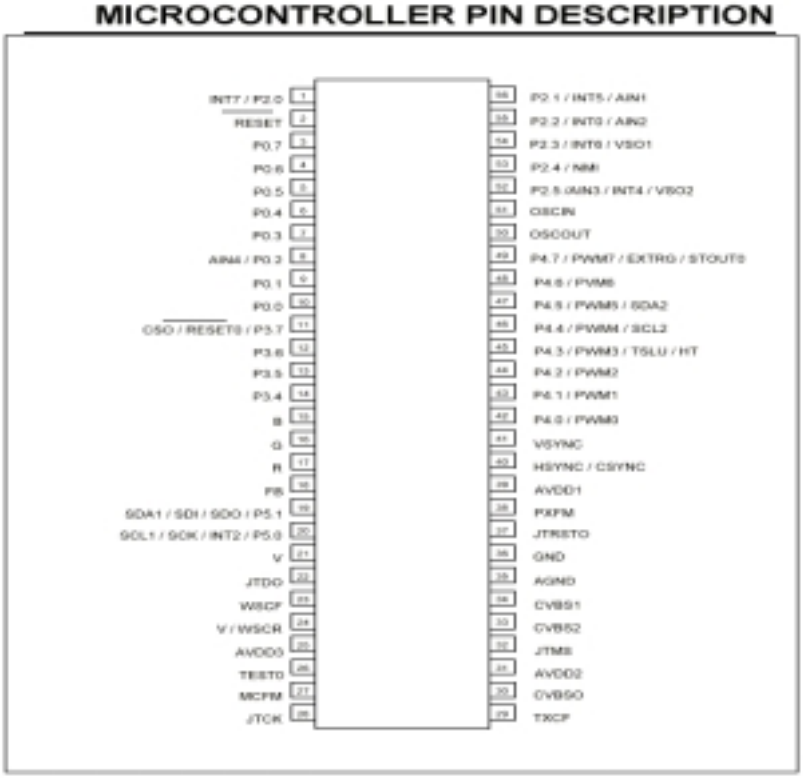

µ-CONTROLLER VERSİON TABLE

FEATURE	DESCRIPTION
NO TXT MONO	IC ST92195C 48K SW-A
NO TXT MONO	IC ST92185B SW-B
1 P MONO	IC ST92195C 48K SW-D
1 P MONO / STR	IC ST92195C 48K SW-E
7 P MONO/STR/WSS	IC ST92195C 64K SW-F
1 P MONO/STR/APS/WSS	IC ST92195C 64K SW-G

10.2 STV224X Video processor:

The STV2246/2247/2248 are fully bus controlled ICs for TV including PIF, SIF, luma, Chroma and deflection processing. Used with a vertical frame booster (TDA1771 or TDA8174 for 90° chassis, STV9306 for 110° chassis), they allow the design of multi-standard (BGDKIMNLL, PAL/ SECAM/NTSC) sets with very few external components and no manual adjustments.

PIN CONNECTIONS STV224X/8X (SDIP56)

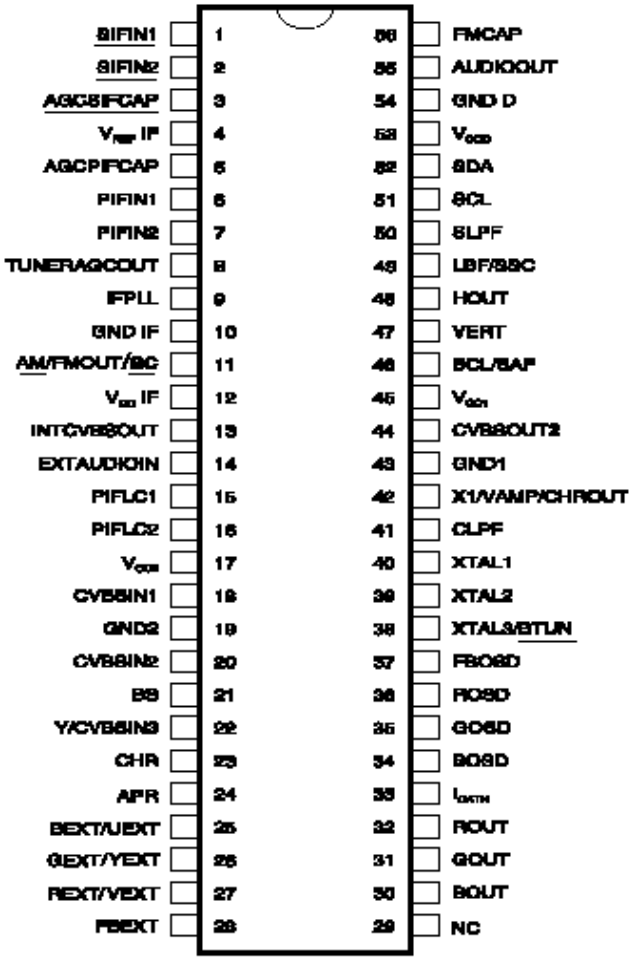

VIDEO PROCESSOR IC TABLE

VIDEO IC	MONO	STEREO	PAL	SECAM	NTSC
STV 2246	OK	-	OK	-	OK
STV 2247	-	OK	OK	-	OK
STV 2248	OK	OK	OK	OK	OK

10.3 UV1315, UV1316, UV1336

General description of UV1315:

The UV1315 tuner belongs to the UV 1300 family of tuners, which are designed to meet a wide range of applications. It is a combined VHF, UHF tuner suitable for CCIR systems B/G, H, L, L', I and I'.

Features of UV1315:

- Member of the UV1300 family small sized UHF/VHF tuners
- Systems CCIR:B/G, H, L, L', I and I'; OIRT:D/K
- Voltage synthesized tuning (VST)
- Off-air channels, S-cable channels and Hyper-band
- Standardized mechanical dimensions and pinning

PINNING		PIN VALUE
1. Gain control voltage (AGC)	:	4.0V, Max:4.5V
2. Tuning voltage		
3. High band switch	:	5V, Min:4.75V, Max:5.5V
4. Mid band switch	:	5V, Min:4.75V, Max:5.5V
5. Low band switch	:	5V, Min:4.75V, Max:5.5V
6. Supply voltage	:	5V, Min:4.75V, Max:5.5V
7. Not connected		
8. Not connected		
9. Not connected		
10. Symmetrical IF output 1		
11. Symmetrical IF output 2		

Band switching table:

BAND	PIN 3	PIN 3	PIN 3
Low Band	0 V	0 V	+5V
Mid Band	0 V	+5V	0 V
High Band	+5V	0 V	0 V

General description of UV1316:

The UV1316 tuner belongs to the UV 1300 family of tuners, which are designed to meet a wide range of applications. It is a combined VHF, UHF tuner suitable for CCIR systems B/G, H, L, L', I and I'.

Features of UV1316:

- Member of the UV1300 family small sized UHF/VHF tuners
- Systems CCIR: B/G, H, L, L', I and I'; OIRT: D/K
- Digitally controlled (PLL) tuning via I²C-bus
- Off-air channels, S-cable channels and Hyper-band
- World standardized mechanical dimensions and world standard pinning
- Complies to "CENELEC EN55020" and "EN55013"

PINNING		PIN VALUE
1. Gain control voltage (AGC)	:	4.0V, Max:4.5V
2. Tuning voltage		
3. I²C-bus address select	:	Max:5.5V
4. I²C-bus serial clock	:	Min:-0.3V, Max:5.5V
5. I²C-bus serial data	:	Min:-0.3V, Max:5.5V
6. Not connected		
7. PLL supply voltage	:	5.0V, Min:4.75V, Max:5.5V
8. ADC input		
9. Tuner supply voltage	:	33V, Min:30V, Max:35V
10. Symmetrical IF output 1		
11. Symmetrical IF output 2		

General description of UV1336:

UV1336 series is developed for reception of channels broadcast in accordance with the M, N standard.

Features of UV1336:

- Global standard pinning
- Integrated Mixer-Oscillator & PLL function
- Conforms to CISPR 13, FCC and DOC (Canada) regulations
- Low power consumption
- Both Phono connector and 'F' connector are available

PINNING		PIN VALUE
1. Gain control voltage	:	4.0V, Max:4.5V
2. Tuning voltage		
3. Address select		Max :5.5V
4. Serial cloc	:	Min :-0.3V, Max:5.5V
5. Serial data	:	Min :-0.3V, Max:5.5V
6. Not connected		
7. Supply voltage	:	5.0V, Min:4.75V, Max:5.5V
8. ADC input (optional)		
9. Tuning supply voltage	:	33V, Min:30V, Max:35V
10. Ground		
11. IF output		

10.4 TDA2822

General Description of TDA2822

The TDA2822 is a mono bridge amplifier specially designed for TV and Portable Radio applications. Requires very few external components

WIDE SUPPLY VOLTAGE RANGE (3-15V)
MINIMUM EXTERNAL COMPONENTS
– NO SVR CAPACITOR
– NO BOOTSTRAP
– NO BOUCHEROT CELLS
SHORT CIRCUIT PROTECTION
THERMAL OVERLOAD PROTECTION

PINNING

1. Output 1
2. Vcc
3. Output 2
4. Gnd
5. Input 2 (-)
6. Input 2 (+)
7. Input 1 (+)
8. Input 1 (-)

10.5 TDA8174AW

INDEPENDENT VERTICAL AMPLITUDE ADJUSTEMENT. BUFFER STAGE. POWER AMPLIFIER FLYBACKGENERATOR. THERMALPROTECTION .INTERNAL REFERENCE VOLTAGE DECOU-PLING

General Description:

TDA8174Aand TDA8174AWare a monolithic integrated circuits. It is a full performance and very efficient vertical deflection circuit intended for direct drive of a TV picture tube in Color and B & W television as well as in Monitor and Data displays.

PINNING

1. POWER OUTPUT
2. OUTPUT STAGE Vs
3. TRIGGER INPUT
4. HEIGHT ADJUSTMENT
5. VOLTAGE REF DECOUPLING
6. GROUND
7. RAMP GENERATOR
8. BUFFER OUTPUT
9. INVERTING INPUT
10. Vs
11. FLYBACK GENERATOR

10.6 UC3842/3

General description:
DESCRIPTION
TheUC3842/3/4/5family of control ICs provides the necessary features to implement off-line or DC to DC fixed frequency current mode control schemes With a minimal external parts count. Internally implemented circuits include under voltage lockout featuring start-up current less than 1 mA, a precision reference trimmed for accuracy at the error amp input, logic to insure latched operation, a PWM comparator which also provides current limit control, and a totem pole output stage designed to source or sink high peak current. The output stage, suitable for driving N-Channel MOSFETs, is low in the off-state. Differences between members of this family are the under-voltage lockout thresholds and maximum duty cycle ranges. The UC3842 and UC3844 have UVLO thresholds of 16V (on) and 10V (off), ideally suited off-line applications The corresponding thresholds for the UC3843 and UC3845 are 8.5 V and 7.9 V. The UC3842 and UC3843 can operate to duty cycles approaching 100%. A range of the zero to < 50 % is obtained by the UC3844 and UC3845by the addition of an internal toggle flip flop which blanks the output off every other clock cycle.

General Features
OPTIMIZED FOR OFF-LINE AND DC TO DC
CONVERTERS
LOWSTART-UP CURRENT (< 1 mA)
AUTOMATIC FEED FORWARD COMPENSA-TION
PULSE-BY-PULSECURRENT LIMITING
ENHANCED LOAD RESPONSE CHARAC-TERISTICS
UNDER-VOLTAGELOCKOUTWITHHYSTER-ESIS
DOUBLE PULSE SUPPRESSION
HIGH CURRENT TOTEMPOLE OUTPUT
INTERNALLY TRIMMED BANDGAP REFER-ENCE
500 KHz OPERATION
LOWRO ERRORAMP

PINNING	PIN VALUE
1. Comp	Compensation input
2. Vfb	Error amplifier input (Regulation)
3. I Sense	Over current protection voltage 1V typ.
4. Rt/Ct	Timing network
5. Ground	
6. Output	MOSFET driver
7. Vcc	Supply voltage
8. Vref	+5V Reference output

10.7 E²Eprom 24CO8

General description:
The 24C08 is a 8Kbit electrically erasable programmable memory (EEPROM), organized as 4 blocks of 256 * 08 bits. The memory operates with a power supply value as low as 2.5V.
Features:
- Minimum 1 million ERASE/WRITE cycles with over 10 years data retention
- Single supply voltage:4.5 to 5.5V
- Two wire serial interface, fully I²C-bus compatible
- Byte and Multi-byte write (up to 8 bytes)
- Page write (up to 16 bytes)
- Byte, random and sequential read modes
- Self timed programming cycle

PINNING	PIN VALUE
1. Write protect enable	: 0V
2. Not connected	: 0V
3. Chip enable input	: 0V
4. Ground	: 0V
5. Serial data address input/output	: Input LOW voltage : Min : -0.3V, Max : 0.3*Vcc
	: Input HIGH voltage : Min : 0.7*Vcc, Max : Vcc+1
6. Serial clock	: Input LOW voltage : Min : -0.3V, Max : 0.3*Vcc
	: Input HIGH voltage : Min : 0.7*Vcc, Max : Vcc+1
7. Multibyte/Page write mode	: Input LOW voltage : Min : -0.3V, Max : 0.5V
	: Input HIGH voltage : Min : Vcc-0.5, Max : Vcc+1
8. Supply voltage	: Min :2.5V, Max : 5.5V

Saw filter's list:

K2962/K2966

		VIDEO	AUDIO
MONO	PAL BG	G1975M	
	PS BG DK	K2966M	
	PAL I I'	J1981	
	PS BG DK K' I I'	K2966M	
	PS BG DK K' L L'	K2962M	L9653

PINNING

1. Input
2. Input-ground
3. Chip carrier-ground
4. Output
5. Output

L9653M

PINNING

1. Input
2. Switching Input
3. Chip carrier-ground
4. Output
5. Output

GENERAL BLOCK DIAGRAM OF CHASSIS 11AK36

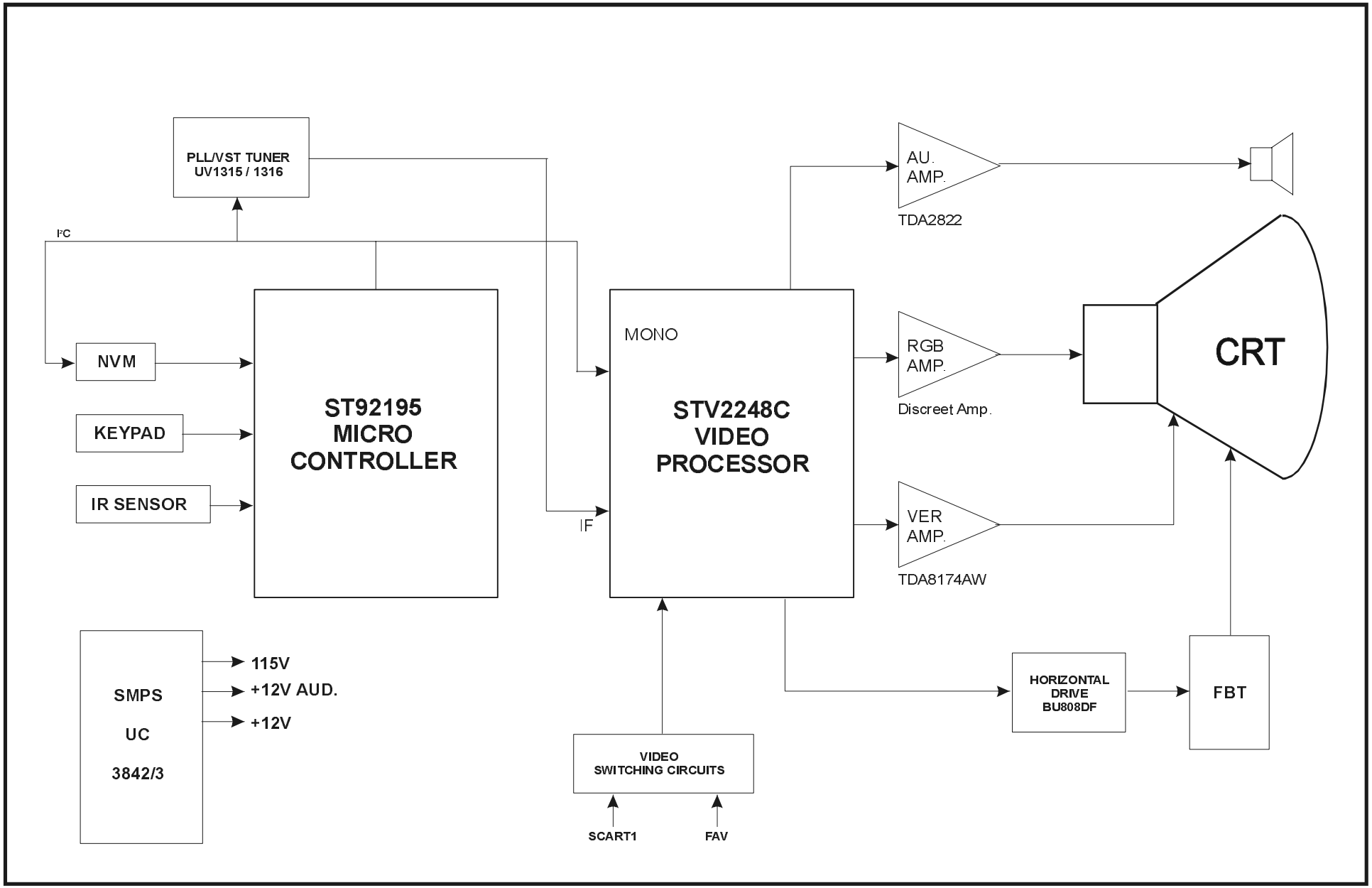

AK36/TITANIUM TELETEXT – Languages Groups

GROUP 1 - WEST
- ENGLISH
- FRENCH
- SWEDISH
- CZECH
- GERMAN
- PORTUGUESE
- ITALIAN
- RUMANIAN

GROUP 2 – WEST / EAST
- POLISH
- FRENCH
- SWEDISH
- CZECH
- GERMAN
- SERBIAN
- ITALIAN
- RUMANIAN

GROUP 3 – WEST / TURKEY
- ENGLISH
- FRENCH
- SWEDISH
- TURKISH
- GERMAN
- PORTUGUESE
- ITALIAN
- RUMANIAN

GROUP 4 – EAST / CYRILLIC
- ENGLISH
- CYRILLIC
- SWEDISH
- CZECH
- GERMAN
- SERBIAN
- LETTISH
- RUMANIAN

GROUP 5 - ARABIC
- ENGLISH
- FRENCH
- SWEDISH
- TURKISH
- GERMAN
- HEBREW
- ITALIAN
- ARABIC

Using Coloured Buttons
RED : No function.
GREEN : Is used to switch the aspect ratio between 4:3 and 16:9.
YELLOW : Is used to prepare the system for screen-adjustments.
BLUE : No function.

AK36 CHASSIS MANUAL ADJUSTMENT PROCEDURE

In order to enter service menu, first enter the main menu and then press the digits 4, 7, 2 and 5 respectively. To select adjust parameters, use ∧ or ∨ buttons. To change the selected parameter, use < or > buttons. Selected parameter will be highlighted.

Entire service menu parameters of AK36 CHASSIS are listed below. For some of parameters the default values are given on the same table.

REGISTER	PARAMETER	NOTE (NUMBERS ARE DEFAULT VALUES FOR CONCERNED ARAMETER)
OSD	OSD Horizontal Position	ADJUST HORIZONTAL POSITION FOR OSD
IF1	IF Coarse Adjust	IF1 Adjust Course Neg. Adj. (WO / L')
IF2	IF Fine Adjust	IF2 Adjust Fine Neg. Adj. (WO / L')
IF3	IF Coarse Adjust for L-Prime	IF3 Adjust Course Pos. Adj. (W / L')
IF4	IF Fine Adjust for L-Prime	IF4 Adjust Fine Pos. Adj. (W / L')
AGC	Automatic Gain Control	AGC Adjust AGC
VLIN	Vertical Linearity	ADJUST VERTICAL LINEARITY
VS1A	Vertical Size for 50 Hz / 4:3	ADJUST VERTICAL SIZE FOR 4:3 MODE (50 HZ)
VS1B	Vertical Size for 50 Hz / 16:9	ADJUST VERTICAL SIZE FOR 16:9 MODE (50 HZ)
VP1	Vertical Position for 50 Hz	ADJUST VERTICAL POSITION (50 HZ)
HP1	Horizontal Position for 50 Hz	ADJUST HORIZONTAL POSITION (50 HZ)
VS2A	Vertical Size for 60 Hz / 4:3	ADJUST VERTICAL SIZE FOR 4:3 MODE (60 HZ)
VS2B	Vertical Size for 60 Hz / 16:9	ADJUST VERTICAL SIZE FOR 16:9 MODE (60 HZ)
VP2	Vertical Position for 60 Hz	ADJUST VERTICAL POSITION (60 HZ)
HP2	Horizontal Position for 60 Hz	ADJUST HORIZONTAL POSITION (60 HZ)
RGBH	RGB Horizontal Shift Offset	CVBS – RGB HORIZONTAL POSITION COMPENSATION
WR	White Point Adjust for RED	40
WG	White Point Adjust for GREEN	40
WB	White Point Adjust for BLUE	40
BR	Bias for RED	31
BG	Bias for GREEN	31
APR	APR Threshold	10
FMP1	FM Prescaler when AVL is OFF	9 (STEREO ONLY)
NIP1	NICAM Prescaler when AVL is OFF	20 (STEREO ONLY)
SCP1	SCART Prescaler when AVL is OFF	13 (STEREO ONLY)
FMP2	FM Prescaler when AVL is ON	13 (STEREO ONLY)
NIP2	NICAM Prescaler when AVL is ON	16 (STEREO ONLY)
SCP2	SCART Prescaler when AVL is ON	13 (STEREO ONLY)
F1H	High Byte of crossover frequency for VHF1-VHF3	MEANINGFUL FOR ONLY PLL TUNER (see tuner setting table)
F1L	Low Byte of crossover frequency for VHF1-VHF3	MEANINGFUL FOR ONLY PLL TUNER (see tuner setting table)
F2H	High Byte of crossover frequency for VHF3-UHF	MEANINGFUL FOR ONLY PLL TUNER (see tuner setting table)
F2L	Low Byte of crossover frequency for VHF3-UHF	MEANINGFUL FOR ONLY PLL TUNER (see tuner setting table)
BS1	Band Switch Byte for VHF1 Meaningful for only	MEANINGFUL FOR ONLY PLL TUNER (see tuner setting table)
BS2	Band Switch Byte for VHF3 Meaningful for only	MEANINGFUL FOR ONLY PLL TUNER (see tuner setting table)
BS3	Band Switch Byte for UHF Meaningful for only	MEANINGFUL FOR ONLY PLL TUNER (see tuner setting table)
CB	Control Byte Meaningful for only PLL Tuner	MEANINGFUL FOR ONLY PLL TUNER (see tuner setting table)
OP1	Option 1 (see the Option List)	PERIPHERAL OPTIONS (see option table)
OP2	Option 2 (see the Option List)	RECEPTION STANDART OPTIONS (see option table)
OP3	Option 3 (see the Option List)	VIDEO OPTIONS (see option table)
OP4	Option 4 (see the Option List)	TV FEATURE OPTIONS (see option table)
OP5	Option 5 (see the Option List)	CHANNEL TABLE OPTIONS (see option table)
TX1	Teletext Option 1 (see the Option List)	TELETEXT OPTIONS (see option table)

USING COLOUR BUTTONS ON SERVICE MENU

RED BUTTON (For Stereo models only): It switches the AVL to ON or OFF mode on service menu. AVL word is visible on service menu when AVL is on.

GREEN BUTTON : It switched the PICTURE MODE to 4:3 or 16:9 on service menu. It is usefull when it is necessary to adjust 16:9 picture mode vertical size.

YELLOW BUTTON : It switches to VERTICAL SCAN DISABLE mode. It is usefull to adjust screen voltage.

BLUE BUTTON : It is used to adjust AGC and IF automatically on service menu.

WHITE BALANCE ADJUSTMENT

The following three parameters are used to make white balance adjustment. To do this, use a Colour Analyser. Using WR (White point adjust for RED), WG (White point adjust for GREEN), WB (White point adjust for BLUE) parameters, insert the + sign in the square which is in the middle of the screen.
The suggested values for these parameters are given on the table above.

AGC ADJUSTMENT

In order to do AGC adjustment, enter a **60dBmV** RF signal level from channel C-12 (224.25 MHz)
Select AGC parameter from service menu. Press BLUE (INSTALL) button from remote controller. The adjustment will be done automatically by software. See the AGC indicator on service menu, it must be 1. Check that picture is normal at 90dBmV signal level.

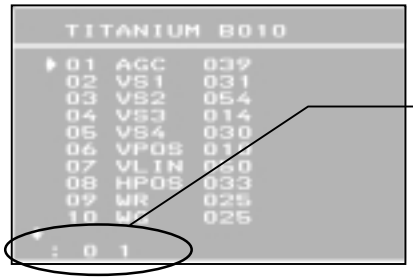

:	1	1
IF INDICATOR	AGC INDICATOR	NONE

IF NEGATIVE ADJUSTMENT (WITHOUT L' SYSTEMS)

Set the video pattern to a **PAL colour bar** pattern with frequency **38.9 MHz**. Apply this IF signal to PIN-10 and PIN-11 of tuner. Press PROG-1 and after that BLUE (INSTALL)button from remote controller. Select the standart as **BG** or **I**. (if BG is not available) Enter service menu. Select **IF1** parameter from service menu and press BLUE (INSTALL) button from remote controller. IF adjustment will be done automatically by software. See the IF indicator on service menu, it must be like on FIGURE-1 shown above.

IF POSITIVE ADJUSTMENT (WITH L' SYSTEMS)

Set the video pattern to a **SECAM-L colour bar** pattern with frequency **33.9 MHz**. Apply this IF signal to PIN-10 and PIN-11 of tuner. Press PROG-1 and after that BLUE (INSTALL)button from remote controller. Select the BAND VHF-1 (C1 – C4 for PLL tuners) and standart as **L'**(L for PLL Tuner). Enter service menu. Select **IF1** parameter from service menu and press BLUE (INSTALL) button from remote controller. IF adjustment will be done automatically by software. See the IF indicator on service menu, it must be like on FIGURE-1 shown above.

OSD HORIZONTAL POSITION ADJUSTMENT

Select OSD parameter on service menu. Adjust the horizontal position of OSD to the middle of screen, by using the reference bar on bottom of service menu. (OSD adjust also Horizontal position for text screen)

TELETEXT BRIGHTNESS ADJUSTMENT

Set the TV set to a channel with TeleText. Enter service menu. Press TEXT button from remote controller. Adjust BRIGHTNESS parameter to value **30** by using left-right buttons from remote controller. Press TV button and MENU button from remote controller respectively. Adjustment is done.

	Vertical Linearty (VLIN) Enter a PAL B/G circle test pattern via RF. Change VLIN till you see circle as round as possible.
50 Hz (PAL PICTURE) ADJUSTMENTS	**Vertical Size (VS1A)** Enter a PAL B/G circle test pattern via RF. Change VS1A (Vertical Size) till horizontal black lines on both the upper and lower part of the test pattern become very close to the upper and lower horizontal sides of picture tube and nearly about to disappear. Check and readjust Vertical Size item if the adjustment becomes improper after some other geometric adjustments are done.
	Vertical Size (VS1B) Enter a PAL B/G circle test pattern via RF. Enter service menu and press GREEN (PICTURE) button from remote controller to switch to 16:9 picture mode on service menu. Change VS1B (Vertical Size) till the picture becomes 16:9 format. Check and eadjust Vertical Size item if the adjustment becomes improper after some other geometric adjustments are done.
	Vertical Position (VP1) Enter a PAL B/G circle test pattern via RF. Change Vertical Position till the test pattern is vertically centred. Horizontal line at the centre pattern is in equal distance both to upper and lower side of the picture tube. Check and readjust Vertical Position item if the adjustment becomes improper after some other geometric adjustments are done.
	Horizontal Position (HP1) Enter a PAL B/G circle test pattern via RF. Change Horizontal Position till the picture is horizontally centred. Check and readjust Horizontal Position item if the adjustment becomes improper after some other geometric adjustments are done.
60 Hz (NTSC PICTURE) ADJUSTMENTS	**Vertical Size (VS2A)** Enter a NTSC-M circle test pattern via RF or video inputs. Change Vertical Size till the checkered parts of test pattern on both of upper and lower side dissappear. Check and readjust Vertical Size item if the adjustment becomes improper after some other geometric adjustments are done.
	Vertical Size (VS2B) Enter a NTSC-M circle test pattern via RF or video inputs. Enter service menu and press GREEN (PICTURE) button from remote controller to switch to 16:9 picture mode on service menu. Change Vertical Size till the picture becomes 16:9 format. Check and readjust Vertical Size item if the adjustment becomes improper after some other geometric adjustments are done.
	Vertical Position (VP2) Enter a NTSC-M circle test pattern via RF or video inputs. Change Vertical Position till the test pattern is vertically centred. Horizontal line at the centre pattern is in equal distance both to upper and lower side of the picture tube. Check and readjust Vertical Position item if the adjustment becomes improper after some other geometric adjustments are done.
	Horizontal Position (HP2) Enter a NTSC-M circle test pattern via RF or video inputs. Change Horizontal Position till the picture is horizontally centred. Check and readjust Vertical Size item if the adjustment becomes improper after some other geometric adjustments are done.
	RGB MODE Horizontal Position (RGBH) Enter a RGB circle test pattern via video inputs. Force the TV to RGB mode by pressing AV button from remote controller. Change RGB Horizontal Position till the picture is horizontally centred. Check and readjust RGBH item if the adjustment becomes improper after some other geometric adjustments are done.

50 Hz. 4:3 Geometry Adjustment

60 Hz. 4:3 Geometry Adjustment

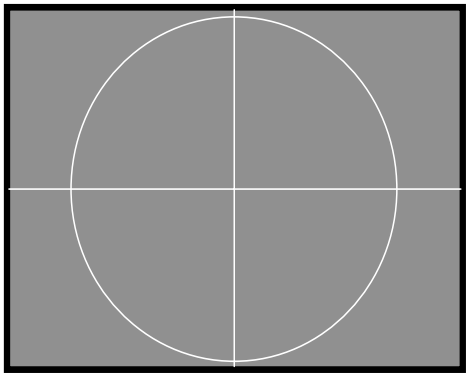

50 Hz. 16:9 Geometry Adjustment

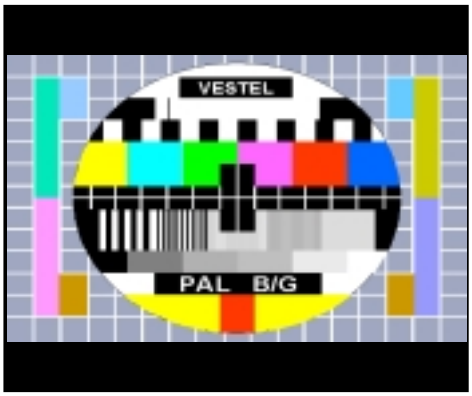

60 Hz. 16:9 Geometry Adjustment

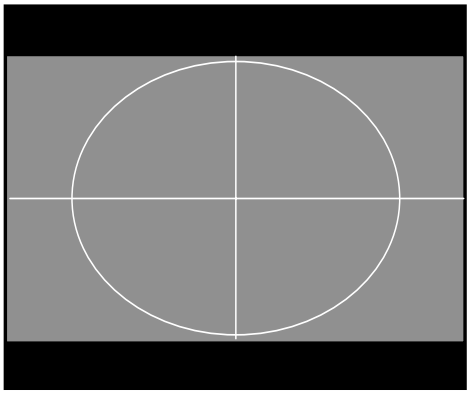

OPTION SETTINGS

Select concerned OPTION from service menu. To change a bit on selected option press the same number from remote controller. So this bit will be changed from 1 to 0 or from 0 to 1. If any option is selected on service menu you will see an indicator row shows you the bit numbers.

OP1 Peripheral Options		
		NOTE
BIT-7	NOT USED	0 default value
BIT-6	1, Display "AV-3" as "F-AV" 0, Display "AV-3" as "B-AV"	FAV or BAV IN selection option
BIT-5	1, Turn back TV mode after the last AV (with AV key) 0, Turn back first AV mode after the last AV	1 defauld value
BIT-4	1, SVHS is available in AV key stream 0, SVHS is NOT available in AV key stream	1, if AV-2 is selected
BIT-3	1, RGB is available in AV key stream 0, RGB is NOT available in AV key stream	1, if AV-1 is selected
BIT-2	1, AV-3 is available in AV key stream 0, AV-3 is NOT available in AV key stream	1, if FAV-IN or BAV-IN available
BIT-1	1, AV-2 is available in AV key stream 0, AV-2 is NOT available in AV key stream	1, if SCART-2 available
BIT-0	1, AV-1 is available in AV key stream 0, AV-1 is NOT available in AV key stream	1, if SCART-1 available

OP2 Reception Standard Options		
		NOTE
BIT-7	1, 3-button keyboard (V-, P+, V+) 0, 4/5 button keyboard (V-, V+, P-, P+, Menu)	Number of Front Panel Button
BIT-6	1, L/L' is available 0, L/L' is not available	1, if TV system inculude SECAM L/L'
BIT-5	1, I is available 0, I is not available	1, if TV system inculude PAL I / I'
BIT-4	1, DK is available 0, DK is not available	1, if TV system inculude DK
BIT-3	1, BG is available 0, BG is not available	1, if TV system inculude BG
BIT-2	RESERVED (Keep as "0")	0, default value
BIT-1	RESERVED (Keep as "0")	0, default value
BIT-0	RESERVED (Keep as "0")	0, default value

OP3 Video Options		
		NOTE
BIT-7 BIT-6	Xtal Configuration 00, 1 Xtal PAL 4.43 01, 2 Xtal PAL/NTSC 4.43/3.58 10, 1 Xtal PAL/SEC/NTSC 4.43 11, 2 Xtal PAL/SEC/NTSC 4.43/3.58	00 - PAL only WO / NTSC Playback 01 - PAL only W / NTSC Playback 02 - PAL, SECAM W / NTSC Playback 03 - PAL SECAM W / NTSC Playbak
BIT-5	1, Enable Blue back when no signal in AV mode 0, blank back when no signal in AV mode	1, default value
BIT-4	1, White Insertion is ON 0, White Insertion is OFF	1, default value
BIT-3	1, Blue Background when no signal in TV mode 0, Disable Blue Background in TV mode	
BIT-2	1, Semi-transparent background for OSD 0, Solid Menu background for OSD	1, default value
BIT-1	1, Black Stretch is ON 0, Black Stretch is OFF	0, default value
BIT-0	1, APR is ON 0, APR is OFF	1, default value

OP4 TV Features		
		NOTE
BIT-7	1, Headphone is available (for STEREO models) 0, Headphone is not available	Stereo Models only. 1 if 1 HP line is visible on sound Menü.
BIT-6	1, Arabic/Persian is available in menu languages 0, Arabic/Persian is not available in menu languages	
BIT-5	1, Hebrew is available in menu languages 0, Hebrew is not available in menu languages	
BIT-4	1, Hotel Mode can be activated 0, Hotel Mode can not be activated	0 defauld value
BIT-3	1, No Signal Timer is enabled 0, No Signal Timer is disabled	5min. countdown and switch off when no signal 1, defauld value
BIT-2	1, Frequency based search for PLL tuner 0, Channel table based search for PLL tuner no meaning for VST tuner	if 0 selected needs to select also channel Tables from OPT-5
BIT-1	1, 3-band tuning (VHF1, VHF3, UHF) 0, 1-band tuning (only UHF)	1, default value
BIT-0	1, Extra 200 msec blanking for VST 0, no extra blanking	1, default value

OP5 Channel Tables		
		NOTE
BIT-7	1, Extra 150 msec blanking more for VST 0, no extra blanking	1, default value
BIT-6	1, "Programme" item in AUTOSTORE menu is visible 0, "Programme" item in AUTOSTORE menu is invisible	1, default value
BIT-5	NOT USED	0, default value
BIT-4	1, French OS Channel Table is available 0, French OS Channel Table is not available	1, when L/L' system is available
BIT-3	1, French Channel Table is available 0, French Channel Table is not available	1, when L/L' system is available
BIT-2	1, England Channel Table is available 0, England Channel Table is not available	1, when I/I' system is available
BIT-1	1, East Europe Channel Table is available 0, East Europe Channel Table is not available	1, when D/K system is available
BIT-0	1, West Europe Channel Table is available 0, West Europe Channel Table is not available	1, when B/G system is available

TX1 Teletext Options		
		NOTE
BIT-7	NOT USED	0, default value
BIT-6	RESERVED (must be 0)	0, default value
BIT-5 BIT-4 BIT-3	5 4 3 Teletext Language Groups 000, Group 1 West (English,French,Swedish,Czech,German,Portuguese,Italien,Rumanian) 001, Group 2 West/East (Polish,French,Swedish,Czech,German,Serbian,Italien,Rumanian) 010, Group 3 West/Turkish (English,French,Swedish,Turkish,German,Portuguese,Italien,Rumanian) 011, Group 4 East/Cyrillic (English,Cyrillic,Swedish,Czech,German,Serbian,Lettish,Rumanian) 100, Group 5 Arabic (English,French,Swedish,Turkish,German,Hebrew,Italien,Arabic)	
BIT-2 BIT-1 BIT-0	2 1 0 Device type selection 000, EPROM M6 A 001, ROM H5 P 010, ROMLESS H5 P 011, EPROM M6 R 100, ROM M6 R 101, OSDEPROM M6 R OTP 110, ROM M6 P MASK 111, Read Auto Gain Table for the device from EEPROM	101, for OTP IC use 110- for MASK IC use

Note : TX1 option is visible Service Menü for only with Text SW - Version

TUNER SETTING

	VHF1-VHF3 Frq. (Mhz)	VHF3-UHF Frq.(Mhz)	AK30 SERVICE MENU ITEMS							
			F1H	F1L	F2H	F2L	BS1	BS2	BS3	CB
Philips UV1316S MK3	156,25 MHz	441,25 MHz	00001100	00110010	00011110	00000010	00000001	00000010	00000100	10001110
Thomson CTT5020	114,25 MHz	401,25 MHz	00001001	10010010	00011011	10000010	00000011	00000110	10000101	10001110
Samsung TECC2949PG28B	170,25 MHz	465,25 MHz	00001101	00010010	00011111	10000010	00000001	00000010	00000100	10001110
Samsung TECC2949PG35B	170,25 MHz	449,25 MHz	00001101	00010010	00011110	10000010	00000001	00000010	00001000	10001110
Alps TEDE9X226A	142,25 MHz	425,25 MHz	00001011	01010010	00011101	00000010	00000001	00000010	00001000	10001110
Alps TEDE9-004A	149,25 MHz	424,25 MHz	00001011	11000010	00011100	11110010	00000001	00000010	00001000	10001110

Explanations	
F1H	High byte of VHF1-VHF3 cross-over frequency
F1L	Low byte of VHF1-VHF3 cross-over frequency
F2H	High byte of VHF3-UHF cross-over frequency
F2L	Low byte of VHF3-UHF cross-over frequency
BS1	Band switching byte for VHF1
BS2	Band switching byte for VHF3
BS3	Band switching byte for UHF
CB	Control byte

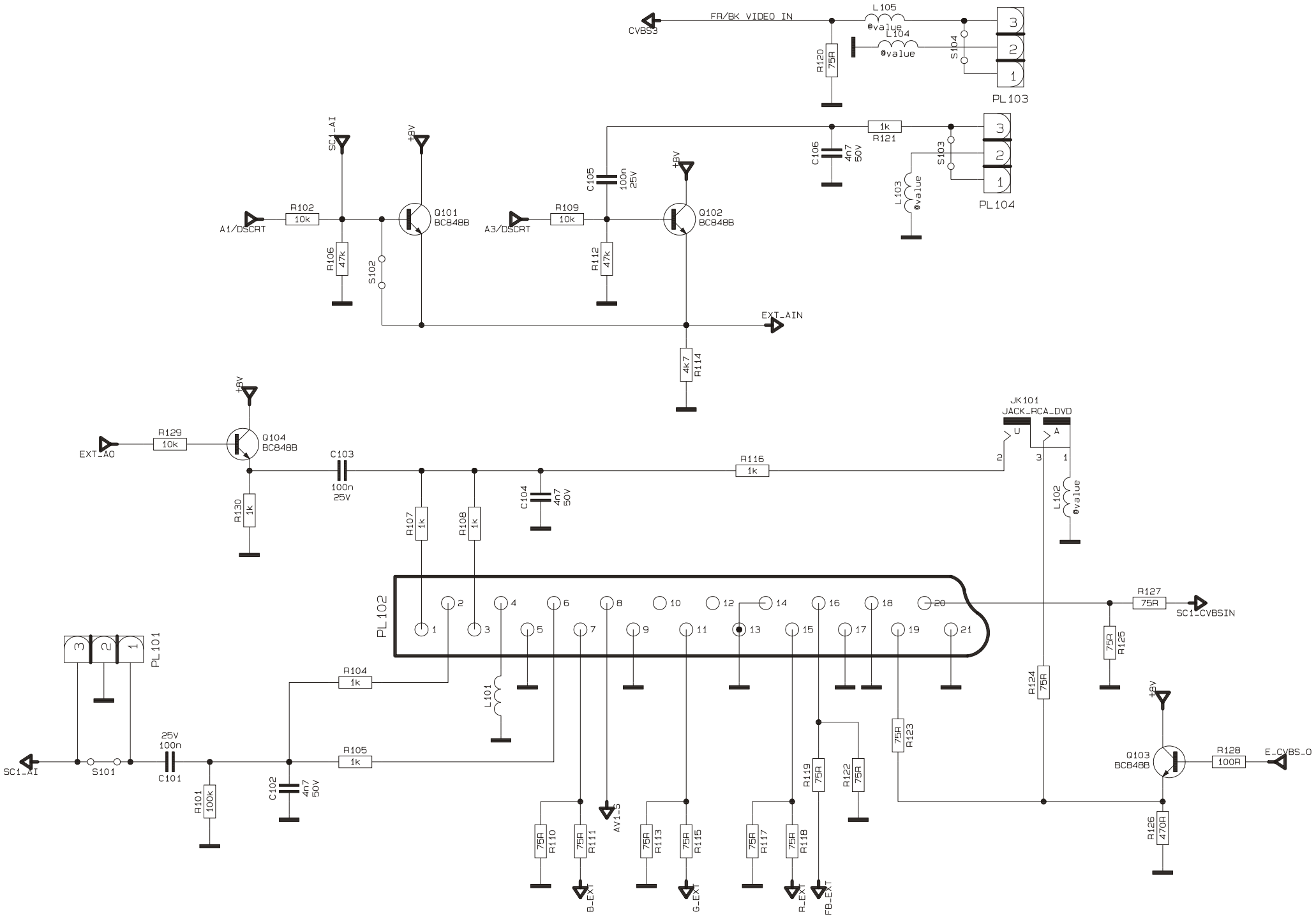
CVBS3
FR/BK VIDEO IN
L105
@value
L104
@value
R120
75R
S104
PL103
R121
1k
C106
4n7
50V
S103
L103
@value
PL104
SC1_AI
+8V
A1/DSCRT
R102
10k
R106
47k
S102
Q101
BC848B
C105
100n
25V
A3/DSCRT
R109
10k
R112
47k
Q102
BC848B
EXT_AIN
R114
4k7
EXT_AO
R129
10k
Q104
BC848B
R130
1k
C103
100n
25V
R107
1k
R108
1k
C104
4n7
50V
R116
1k
JK101
JACK_RCA_DVD
L102
@value
PL102
R127
75R
SC1_CVBSIN
R125
75R
PL101
R104
1k
L101
R124
75R
R123
75R
R105
1k
SC1_AI
S101
25V
100n
C101
R101
100k
C102
4n7
50V
R119
75R
R122
75R
Q103
BC848B
R128
100R
E_CVBS_O
R126
470R
R110
75R
R111
75R
AV1_S
R113
75R
R115
75R
R117
75R
R118
75R
B_EXT
G_EXT
R_EXT
FB_EXT

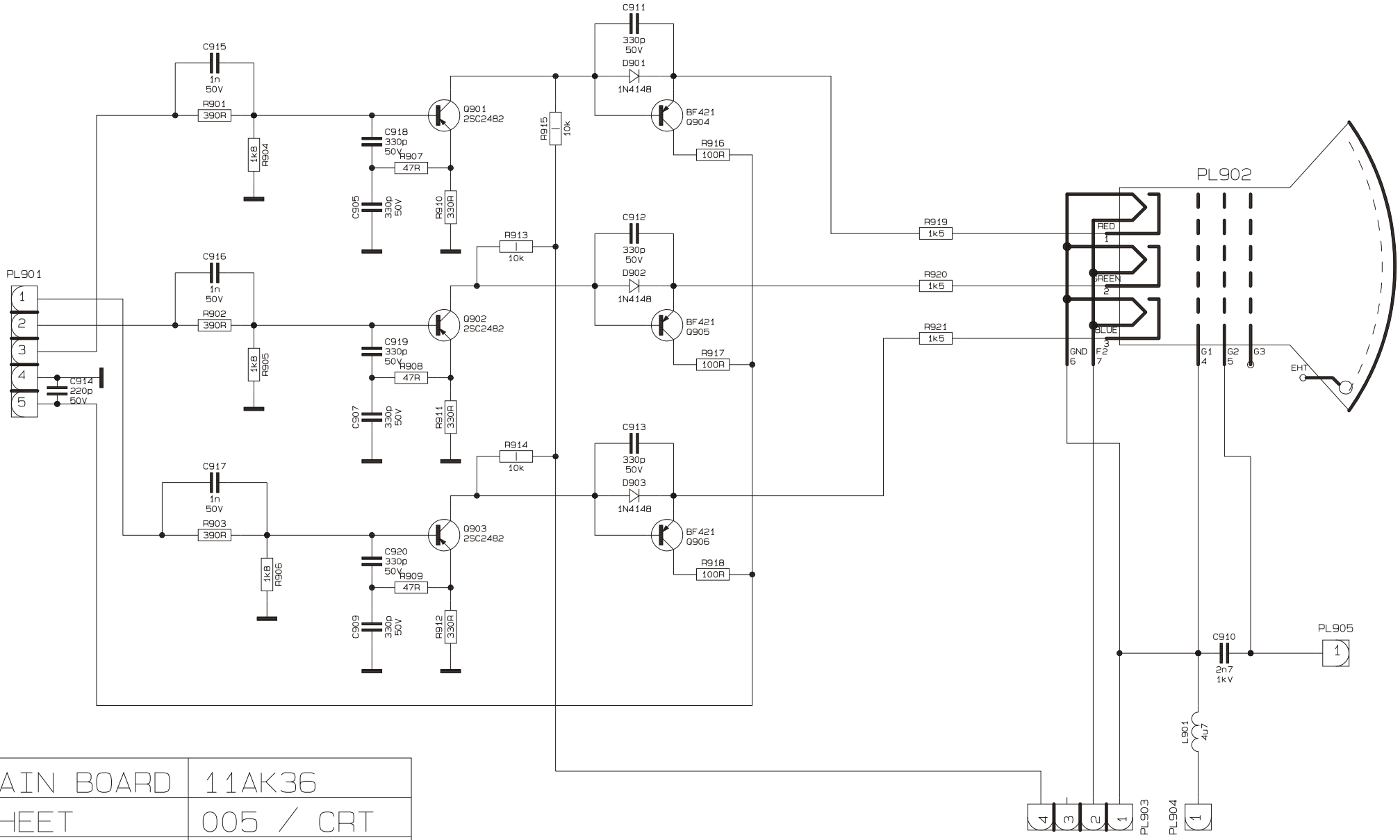

MAIN BOARD	11AK36
SHEET	005 / CRT
VERSION	E4
DATE	01.07.2001

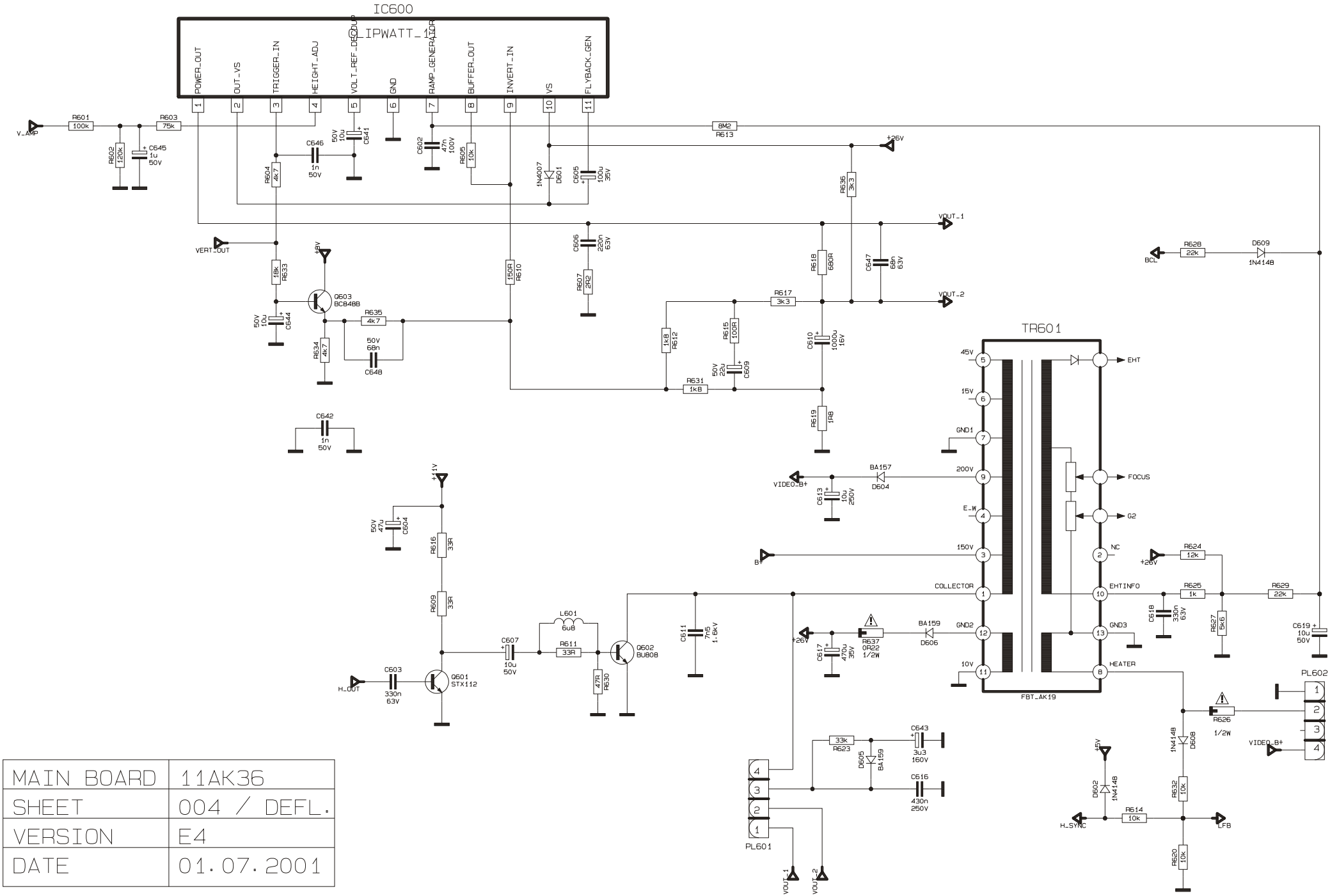

MAIN BOARD	11AK36
SHEET	004 / DEFL.
VERSION	E4
DATE	01.07.2001

MAIN BOARD	11AK36
SHEET	006 / SMPS
VERSION	E4
DATE	01.07.2001

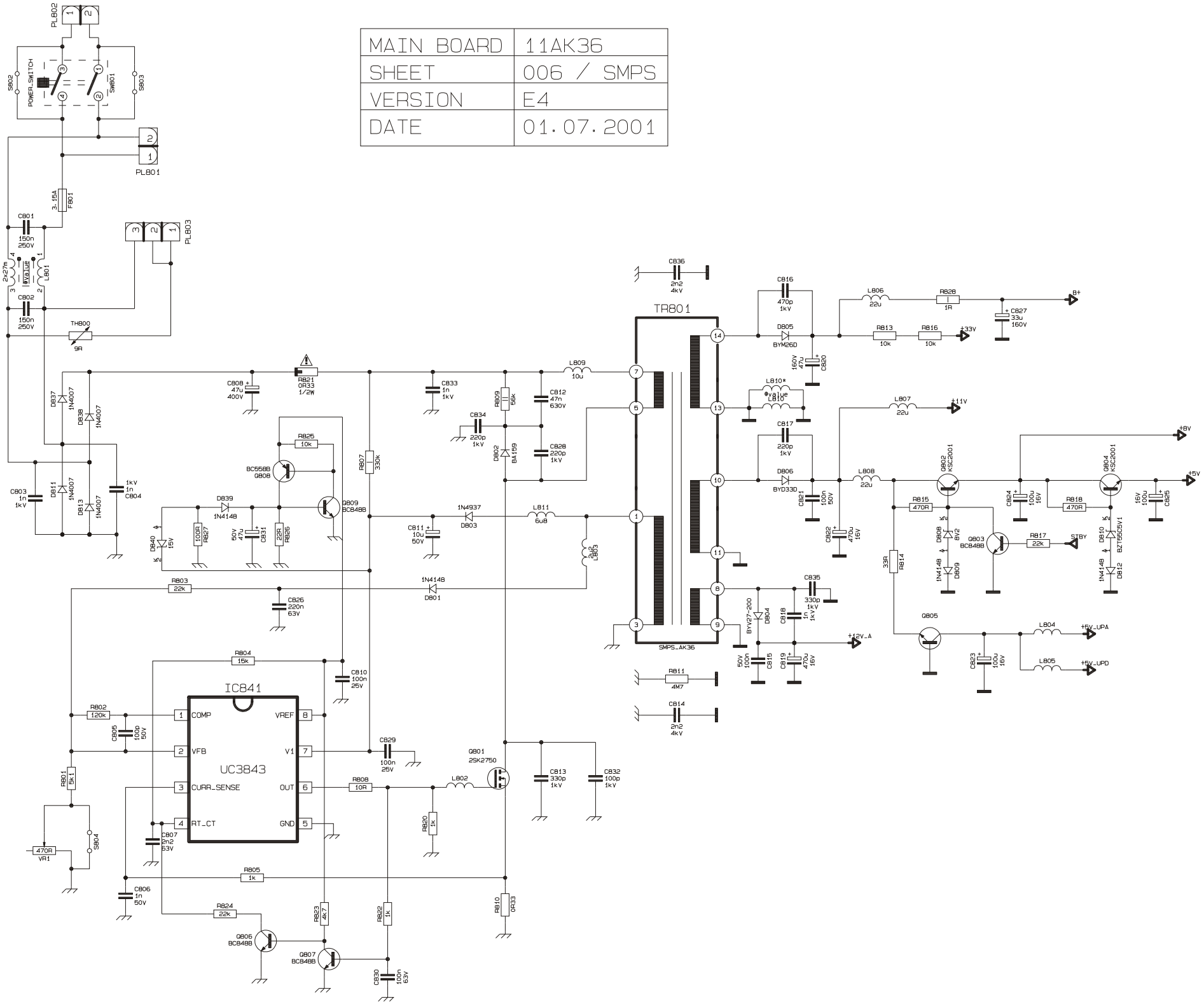

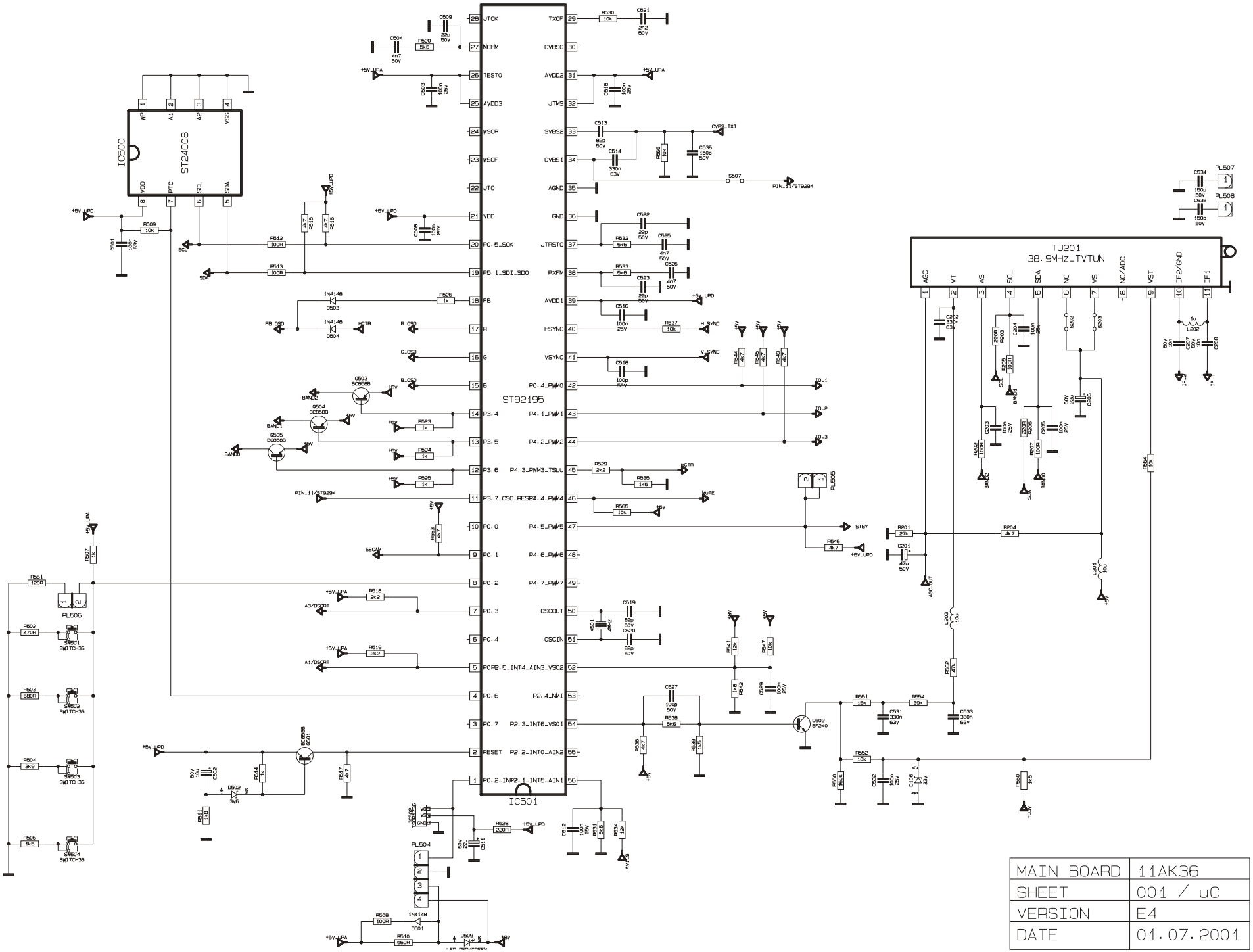

MAIN BOARD	11AK36
SHEET	001 / uC
VERSION	E4
DATE	01.07.2001
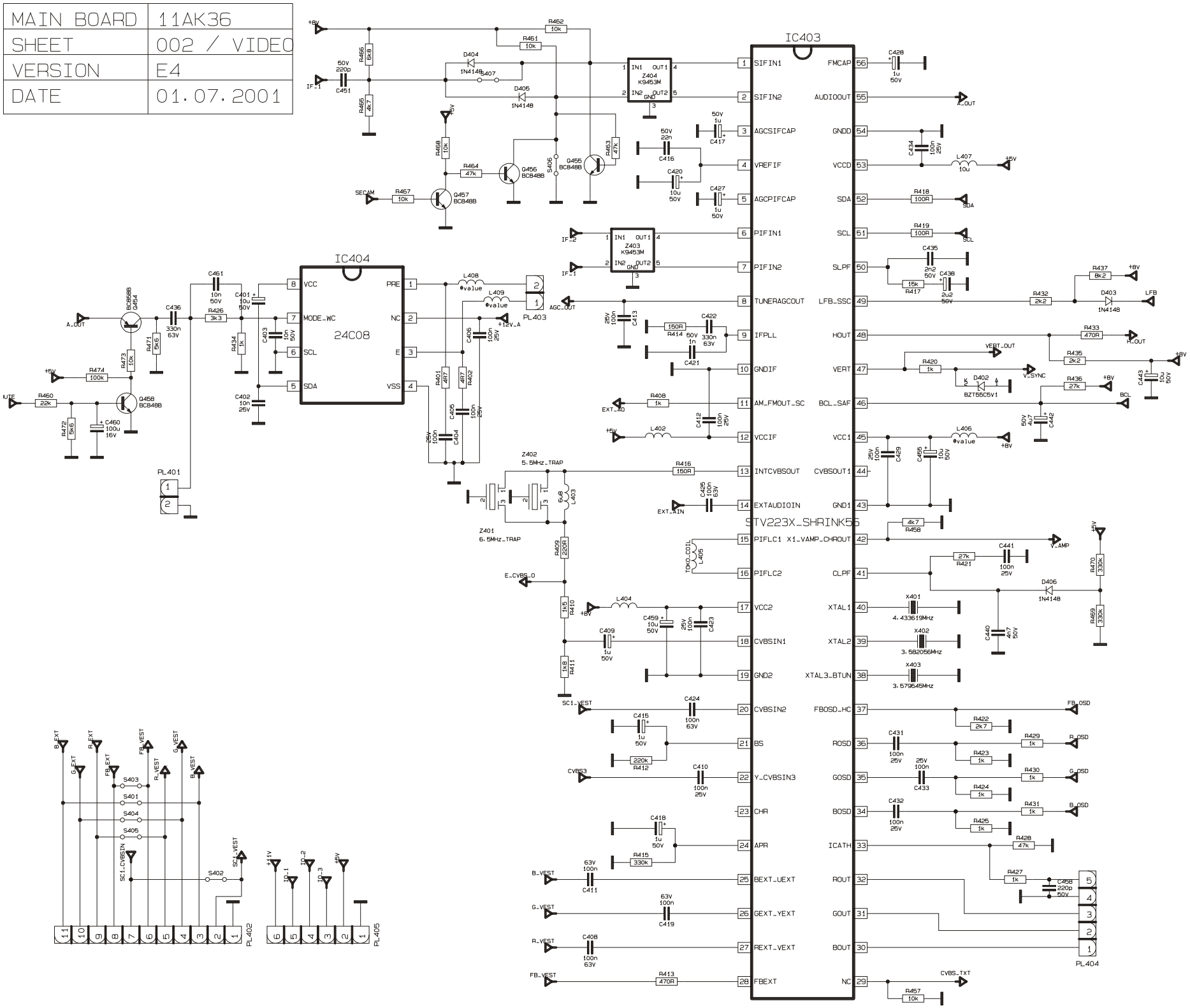
MAIN BOARD	11AK36
SHEET	002 / VIDEO
VERSION	E4
DATE	01.07.2001