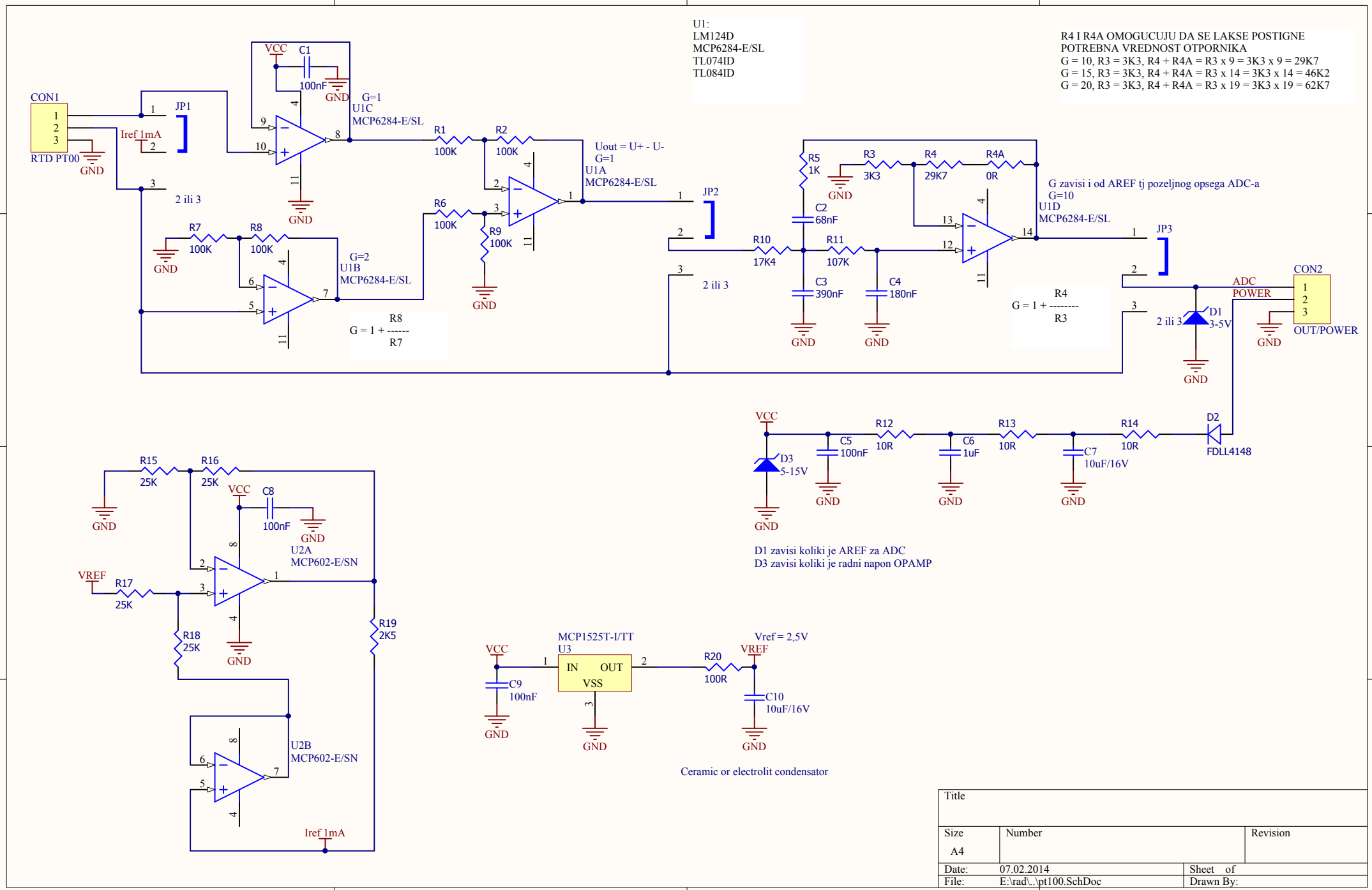

Title		
Size A4	Number	Revision
Date: 07.02.2014		Sheet of
File: E:\rad\..\pt100.SchDoc		Drawn By:

Bill of Materials

<Parameter Title not found>

Source Data From: pt100.PrjPcb
Project: pt100.PrjPcb
Variant: None

Creation Date: 07.02.2014 21:01:28
Print Date: 07-Feb-14 9:01:35 PM

Footprint	Comment	LibRef	Designator	Description	Quantity
SM/C_0805	100nF	CAP_3, KOKE 1UF/10	C1, C5, C8, C9	Capacitor	4
SM/C_0805	68nF	KOKE 1UF/10	C2		1
SM/C_0805	390nF	KOKE 1UF/10	C3		1
SM/C_0805	180nF	KOKE 1UF/10	C4		1
SM/C_0805	1uF	KOKE 1UF/10	C6		1
C1210	10uF/16V	Cap Semi	C7, C10	Capacitor (Semiconductor SIM Model)	2
KLEMA3P__V3	RTD PT00	Header 3	CON1	Header, 3-Pin	1
KLEMA3P__V3	OUT/POWER	Header 3	CON2	Header, 3-Pin	1
SM/DO213AA_21	3-5V	D Zener	D1	Zener Diode	1
SM/DO213AA_21	FDLL4148	DIODE	D2		1
SM/DO213AA_21	5-15V	D Zener	D3	Zener Diode	1
HDR1X3_	2 ili 3	JUMPER2	JP1, JP2, JP3	Jumper	3
SM/R_0805	100K	RES1	R1, R2, R6, R7, R8, R9		6
SM/R_0805	3K3	RES1	R3		1
SM/R_0805	29K7	RES1	R4		1
SM/R_0805	0R	RES1	R4A		1
SM/R_0805	1K	RES1	R5		1
SM/R_0805	17K4	RES1	R10		1
SM/R_0805	107K	RES1	R11		1
SM/R_0805	10R	RES1	R12, R13, R14		3
SM/R_0805	25K	RES1	R15, R16, R17, R18		4
SM/R_0805	2K5	RES1	R19		1
SM/R_0805	100R	Res3	R20	Resistor	1
SOG.050/14/WG.244/L.350	MCP6284-E/SL	MCP6284-E/SL	U1	450 uA, 5 MHz Rail-to-Rail Operational Amplifier, 14-Pin SOIC, Extended Temperature	1
SOIC-SN8_N	MCP602-E/SN	MCP602-E/SN	U2	2.7V to 6.0V Single Supply CMOS Operational Amplifier, 8-Pin SOIC, Extenc Temperature	1
SM/SOT23_123	MCP1525T-I/TT	MCP1541T-I/TT	U3	4.096V Voltage Reference, 3-Pin SOT-23 Industrial Temperature, Tape and Reel	1
					42

Approved **Notes**