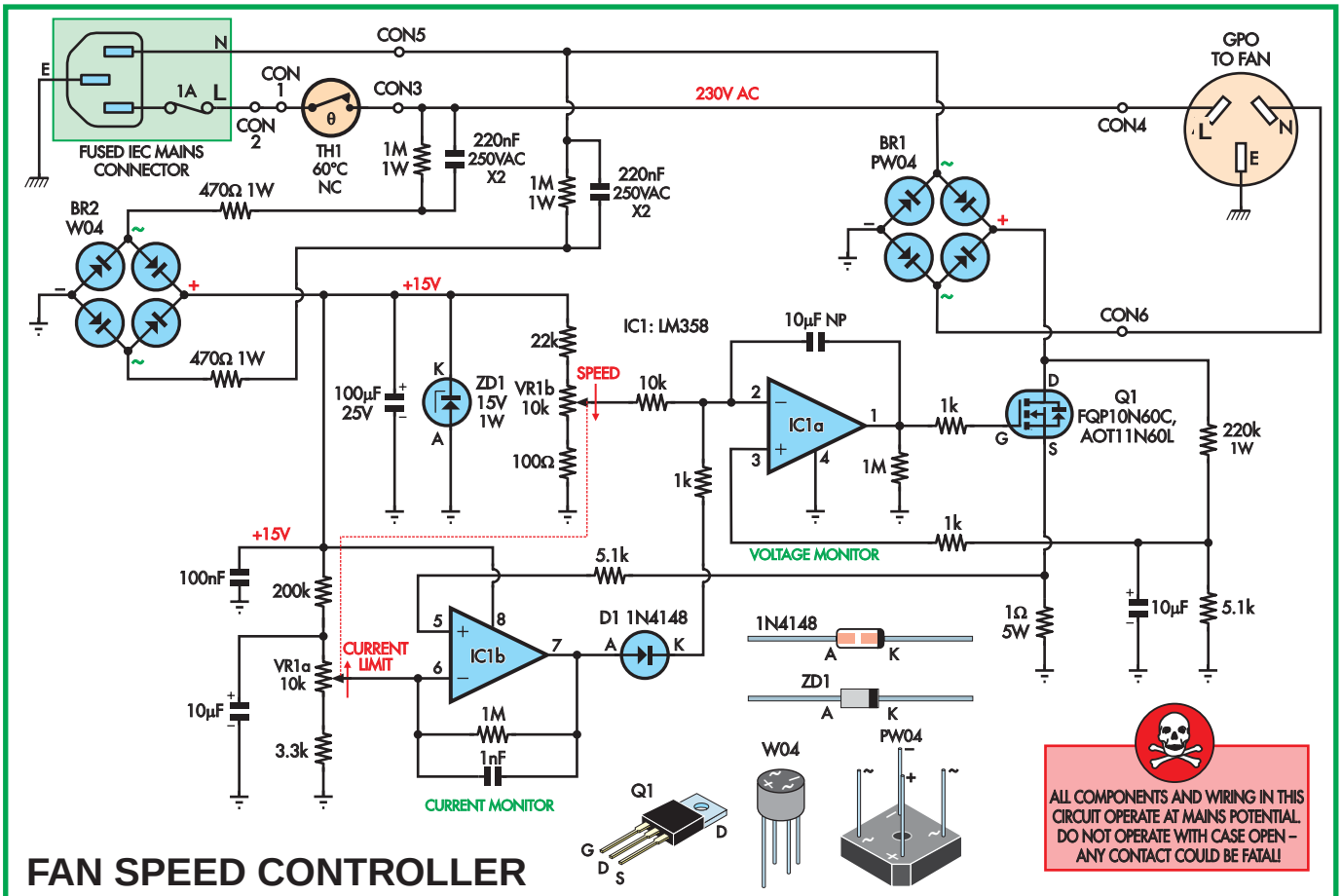

Fig.2: the circuit for our new *Fan Speed Controller* shows it has two bridge rectifiers, one of which provides low voltage DC direct from the mains. This is used to power the rest of the circuit. The second bridge (BR1) allows a power MOSFET to control the current to the AC motor over both halves of the 230V mains cycle. The MOSFET acts like a variable resistor, supplying more or less power to the fan motor depending on the setting of VR1a and b.

The 220nF capacitors provide an impedance that limits current flow to the 15V Zener diode ZD1. At 50Hz, the impedance of each 220nF capacitor is 14.5kΩ. This impedance plus the 470Ω limits current to the 15V Zener diode, ZD1 to about 10mA. A 100µF capacitor across the resulting 15V supply smooths it to a constant DC voltage.

The 470Ω resistors in series with the 220nF capacitors are there to limit surge current when power is first applied to the circuit. The surge current could be high should power be switched on at the peak voltage of the mains waveform. 1MΩ resistors across the capacitors are to discharge them when the power is switched off.

The 15V supply powers the LM358 dual op amp, IC1. One of these operational amplifiers, IC1a, is used to drive the gate of MOSFET Q1. This op amp is connected in a feedback control loop that monitors both a divided version of the voltage between Q1's drain and source and the voltage provided by speed potentiometer VR1b. IC1a adjusts its output voltage at the MOSFET gate so that the divided drain-source voltage across the MOSFET matches that set by the speed potentiometer.

In more detail, a 220kΩ 1W resistor and a 5.1kΩ resistor form a voltage divider across Q1 (ignoring the series 1Ω resistor). This effectively reduces the voltage across Q1 to about 1/44 its original value, calculated as (5.1k + 220k) ÷ 5.1k. The resulting voltage is filtered with a 10µF capacitor providing a DC voltage from the full-wave rectified waveform.

The resistive divider is there to produce a suitable low voltage for monitoring by IC1a. The maximum voltage needs to be several volts below the positive supply for IC1 at 15V. That's because the op amp is designed to operate with inputs that can go down to the negative supply, but not as high as the positive supply.

Maximum voltage from the divider occurs when Q1 is at a high resistance. Then the full 230VAC of the mains supply is across the MOSFET. The peak of the 230V RMS waveform is 325V and after reduction by a factor of 44, brings the voltage down to 7.39V peak. This becomes 4.7V DC after filtering with the 10µF capacitor. Note that this average voltage of the full-wave rectified waveform is 0.63 of the waveform peak.

As the resistance of Q1 is decreased, there is more voltage across the fan motor and less across the MOSFET. The voltage from the divider is therefore also lower.

VR1b is the speed control adjustment. VR1b is connected in series between a 22kΩ resistor from the +15V supply and a 100Ω resistor connecting to the 0V supply. With this resistor string, the voltage range for the wiper of VR1b is between 5V and 0.05V.

Operation is as follows: if VR1b is set to produce, for example, 2V DC at its wiper – IC1a adjusts its drive to the

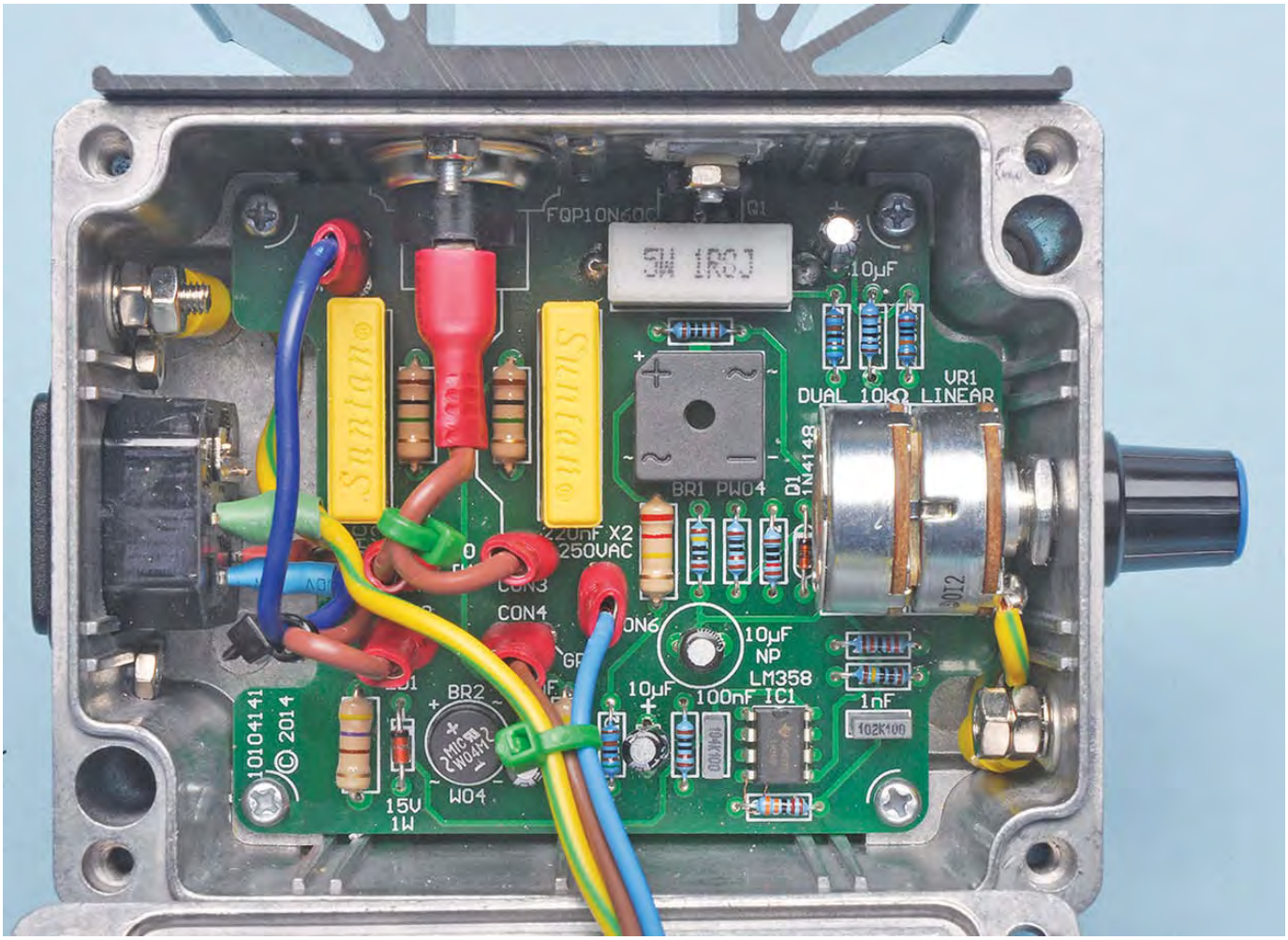

Looking inside the open 'IP65' case shows how easy the PCB mounts on the tapped supports inside. Note that we do not have the IEC power lead plugged in – neither should you whenever the case is open!

gate of Q1 so that the voltage monitored at the divide-by-44 resistors is also 2V DC. With 2V on the divider it means that there is 88V (average) across Q1.

The 88V average is equivalent to 97.5V RMS. If the mains voltage is at 230VAC RMS then the voltage across the fan is: 230V – 97.5V = 132.5V RMS.

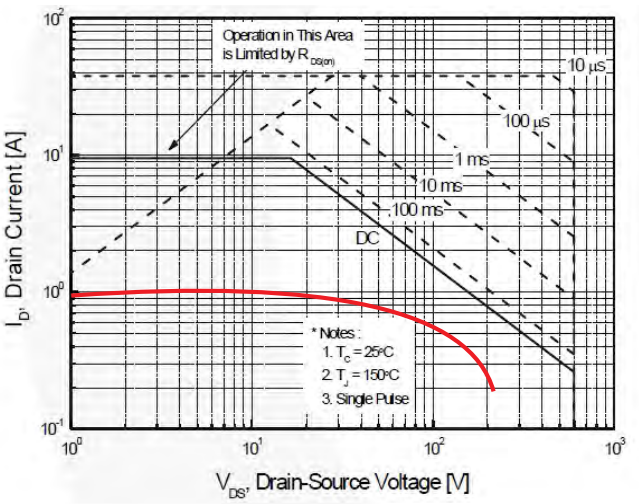

Fig. 3: SOA graph for the FQP10N60C MOSFET used in this project. The text explains how to interpret this.

Note that for VR1b, the lower voltage is deliberately made to be slightly above 0V using the 100Ω resistor. This is to prevent IC1a from oscillation at the lowest voltage position for VR1b.

The voltage feedback control ensures that voltage across the MOSFET is strictly maintained to prevent changes in the motor speed. That's provided the mains voltage remains reasonably constant (which it usually does). Without the feedback control and just applying a fixed voltage to the gate of Q1, the fan would slow quite markedly as the MOSFET heats up. That's because the MOSFET drain to source resistance increases with temperature.

Current limit

Current limiting for this circuit is necessary due to the fact that while the MOSFET can happily conduct around 10A, this is only when there is a relatively low voltage between its drain and source. With a high voltage between drain and source, the current needs to be reduced to prevent internal damage to the MOSFET.

Incidentally, no domestic fan (plug-in or ceiling) will demand anything like 10A. They're much more likely to draw a tiny fraction of this – most fans are rated at 10-50W, which equates to just 40-220mA!

Fig.4 shows the 'safe operating area' (SOA) of the FQP10N60C MOSFET. The lower DC, SOA line shows