ELENCO PEZZI DI RICAMBIO
LISTE PIECES DETACHEES
SPARE PARTS LIST
ERSATZTEILLISTE
PIEZAS DE REPUESTO

LEADER 400 START

Esploso macchina, Dessin appareil, Machine drawing, Explosions Zeichnung des Geräts, Diseño seccionado maquina.

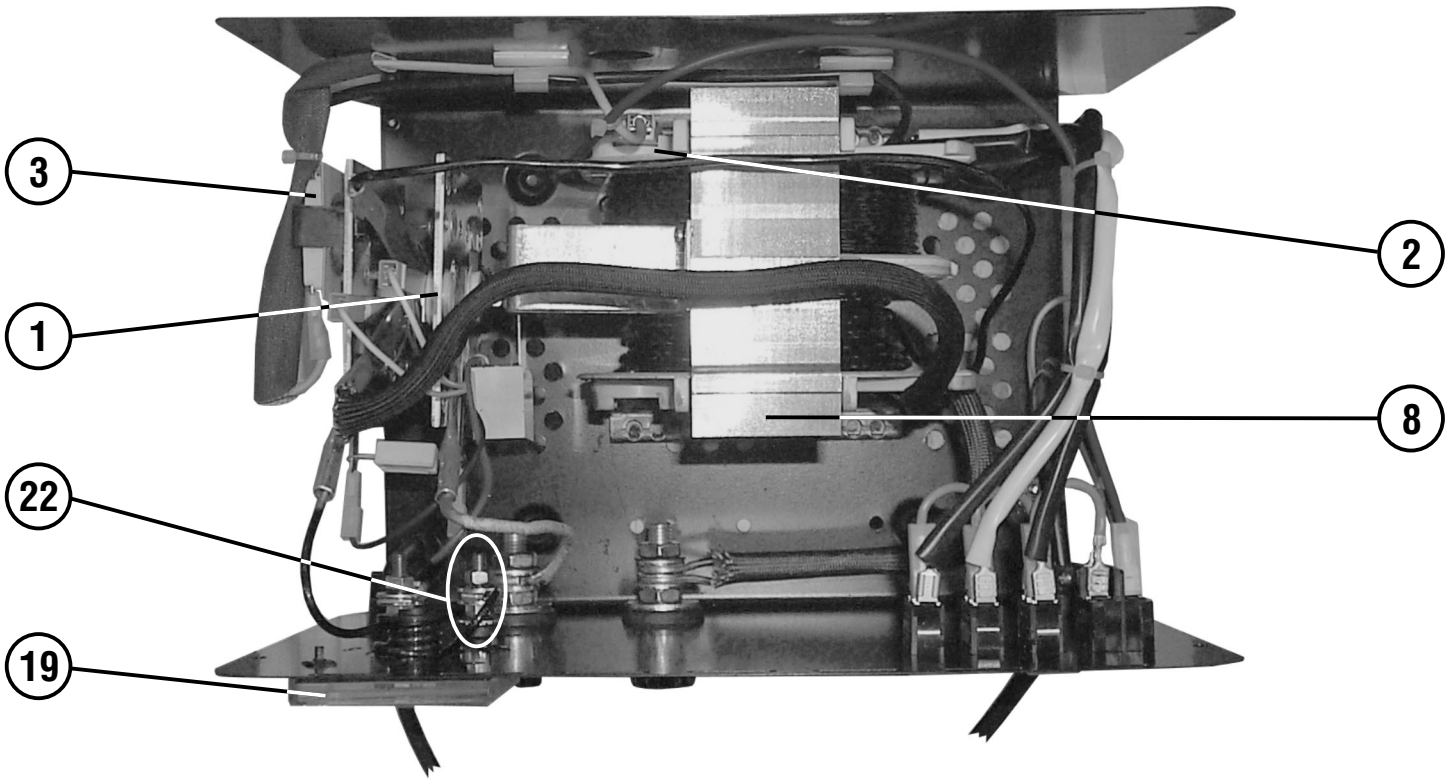

REF.	ELENCO PEZZI DI RICAMBIO PIECES DETACHEES SPARE PARTS LIST ERSATZTEILLISTE PIEZAS DE REPUESTO	CODE CODICE KODE
1	Kit Raddrizzatore Kit Redresseur Rectifier Kit Gleichrichter Kit Kit Rectificador	990685
2	Termostato Thermostat Thermostat Thermostat Termostato	121069
3	Termostato Thermostat Thermostat Thermostat Termostato	121021
4	Interruttore Interupteur Switch Schalter Interruptor	122477
5	Deviatore Gareur Switch Schalter Interruptor	122400
6	Cavo 10 Mmq 2 M Cable 10 Mmq 2 M Cable 10 Mmq 2 M Kabel 10 Mmq 2 M Cable 10 Mmq 2 M	123425
7	Cavo Alim. 3G1.5 2 M Spina Schuko Cable Alim. 3G1.5 2 M Fiche Schuko Mains Cable 3G1.5 2 M Schuko Plug Netzkabel 3G1.5 2 M Schuko Stecker Cable Alim. 3G1.5 2M Espina Schuko	132310
8	Trasformatore Transformateur Transformer Transformator Transformador	169140
9	Volantino Volant Handwheel Handrad Volante	312053
10	Pressacavo Presse Cable Cable Bushing Kabelhalter Prensa Cable	322112
11	Kit Frontale Kit Partie Frontal Front Panel Kit Geraetefront Kit Kit Frontal	990950

REF.	ELENCO PEZZI DI RICAMBIO PIECES DETACHEES SPARE PARTS LIST ERSATZTEILLISTE PIEZAS DE REPUESTO	CODE CODICE KODE
12	Kit Mantello Kit Capot Cover Kit Deckel Kit Kit Panel De Cobertura	990948
13	Pinza Di Massa 150 A Pince De Masse 150 A Work Clamp 150 A Masseklemme 150 A Pinza De Masa 150 A	712001
14	Pinza Positivo Pince Positiv Positive Clamp Positive Zange Pinza Positivo	712002
15	Kit 20 Fusibili 50A Kit 20 Fusibles 50A Kit 20 Fuses 50A Kit 20 Sicherungen 50A Kit 20 Fusibles 50A	802259
16	Kit Morsetto Completo D.33mm Kit Borne Complete D.33mm Kit Complete Clamp D.33mm Kit Komplette Klemme D.33mm Kit Borne Completo D.33mm	990162
17	Kit Coppia Rondelle Isolanti Kit Rondelles Isolantes Insulating Washers Kit Isolierscheibekit Kit Arandelas Asladoras	990163
18	Kit Maniglia Kit Poignee Kit Handle Kit Handgriff Kit Manija	990341
19	Amperometro Amperemetre Ammeter Amperemeter Amperimetro	152020
20	Cornice Cadre Frame Rahmen Marco	322666
21	Cuffia Per Fusibili Couvre Fusibles Fuse Cover Kasten Fuer Sicherungen Cubrefusibile	322051
22	Morsetto Per Fusibile Borne Pour Fusible Fuse Holder Clamp Sicherungshalter Klemme Bocadillo Para Fusible	980036

REF.	ELENCO PEZZI DI RICAMBIO PIECES DETACHEES SPARE PARTS LIST ERSATZTEILLISTE PIEZAS DE REPUESTO	CODE CODICE KODE
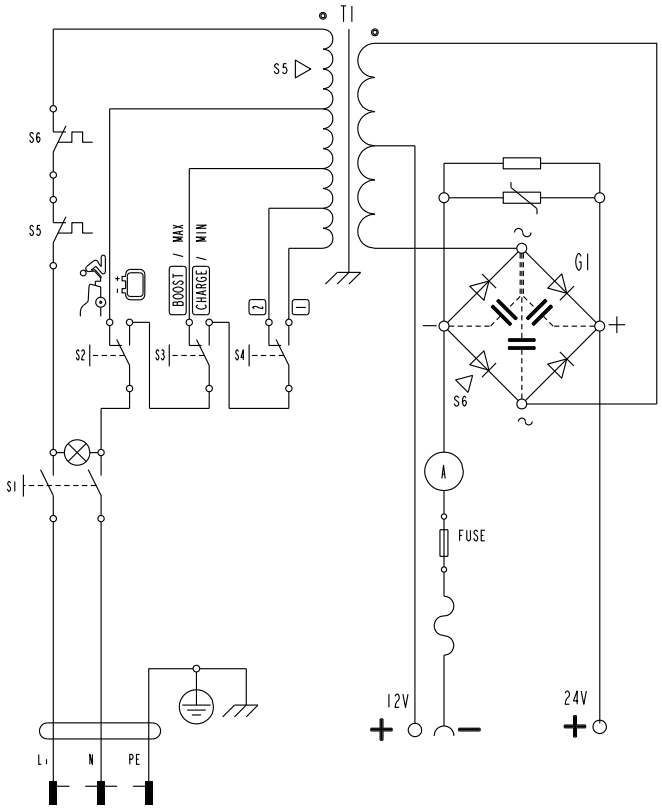
Schema elettrico, Schéma électrique, Diagram, Schaltplan, Esquema de conexiones.