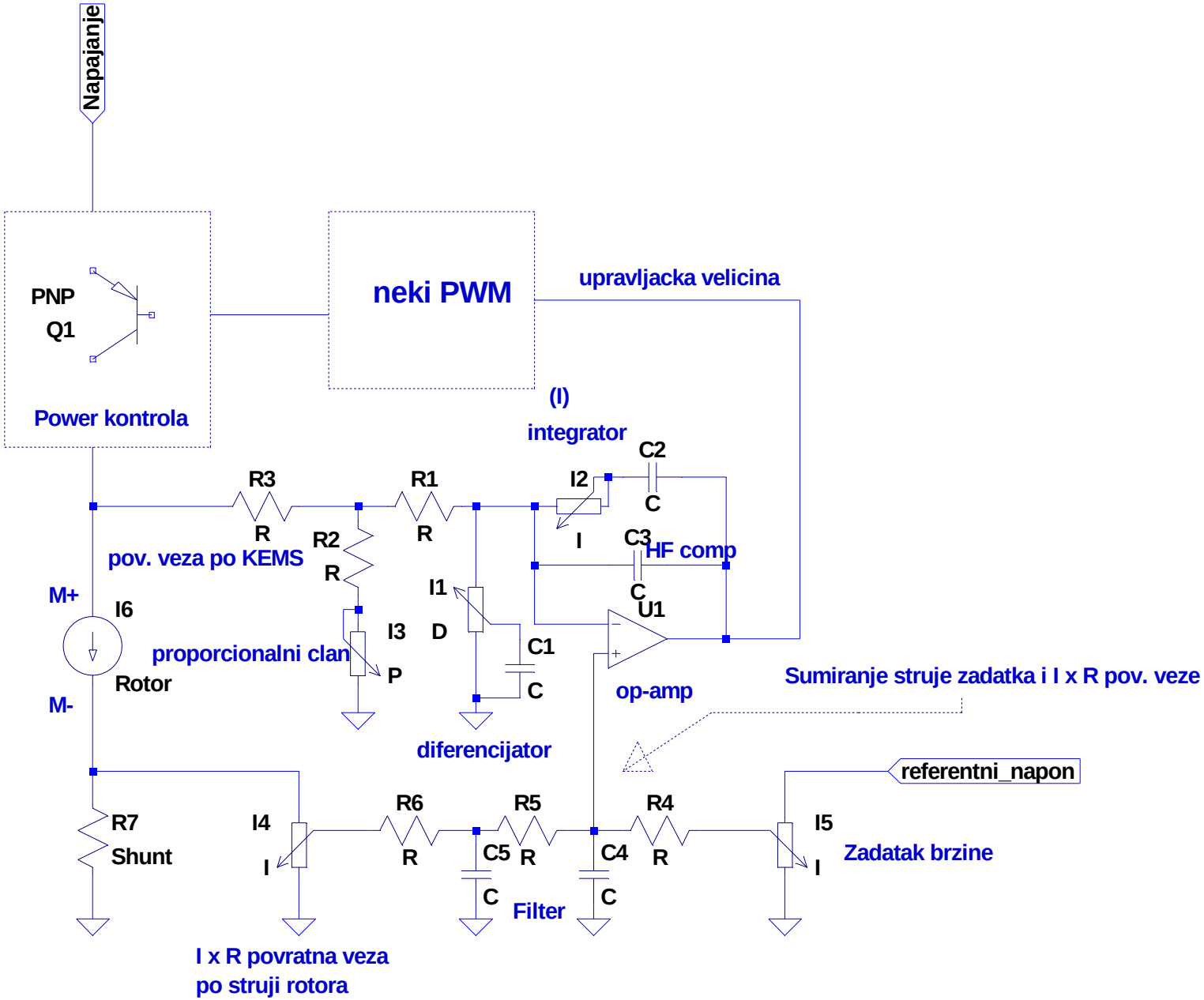

--- C:\Program Files\LTC\LTspiceIV\mot_ctrl.asc ---