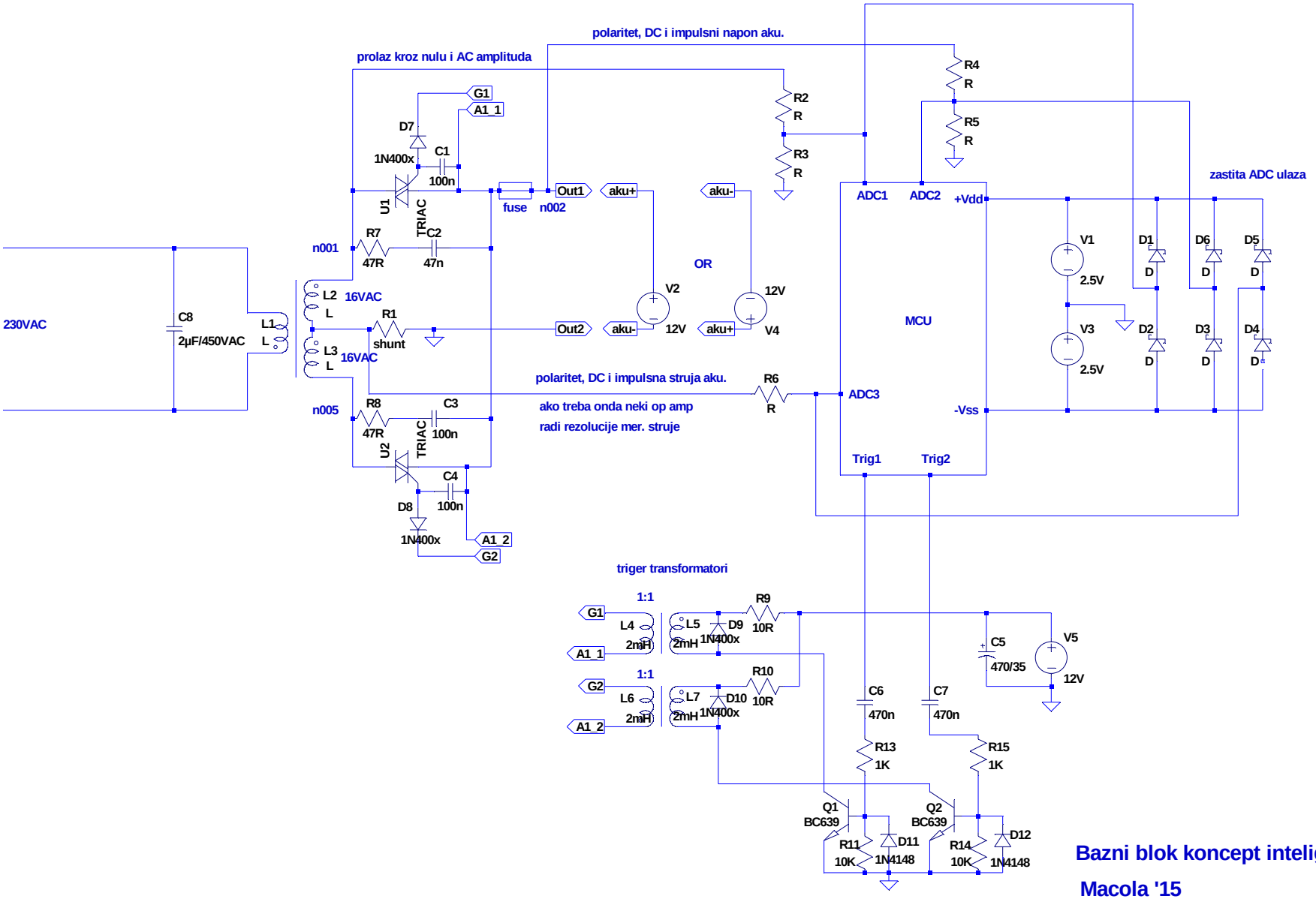

Bazni blok koncept inteligentnog punjaca.

Macola '15

--- C:\Program Files\LTC\LTspiceIV\Punjac_koncept.asc ---