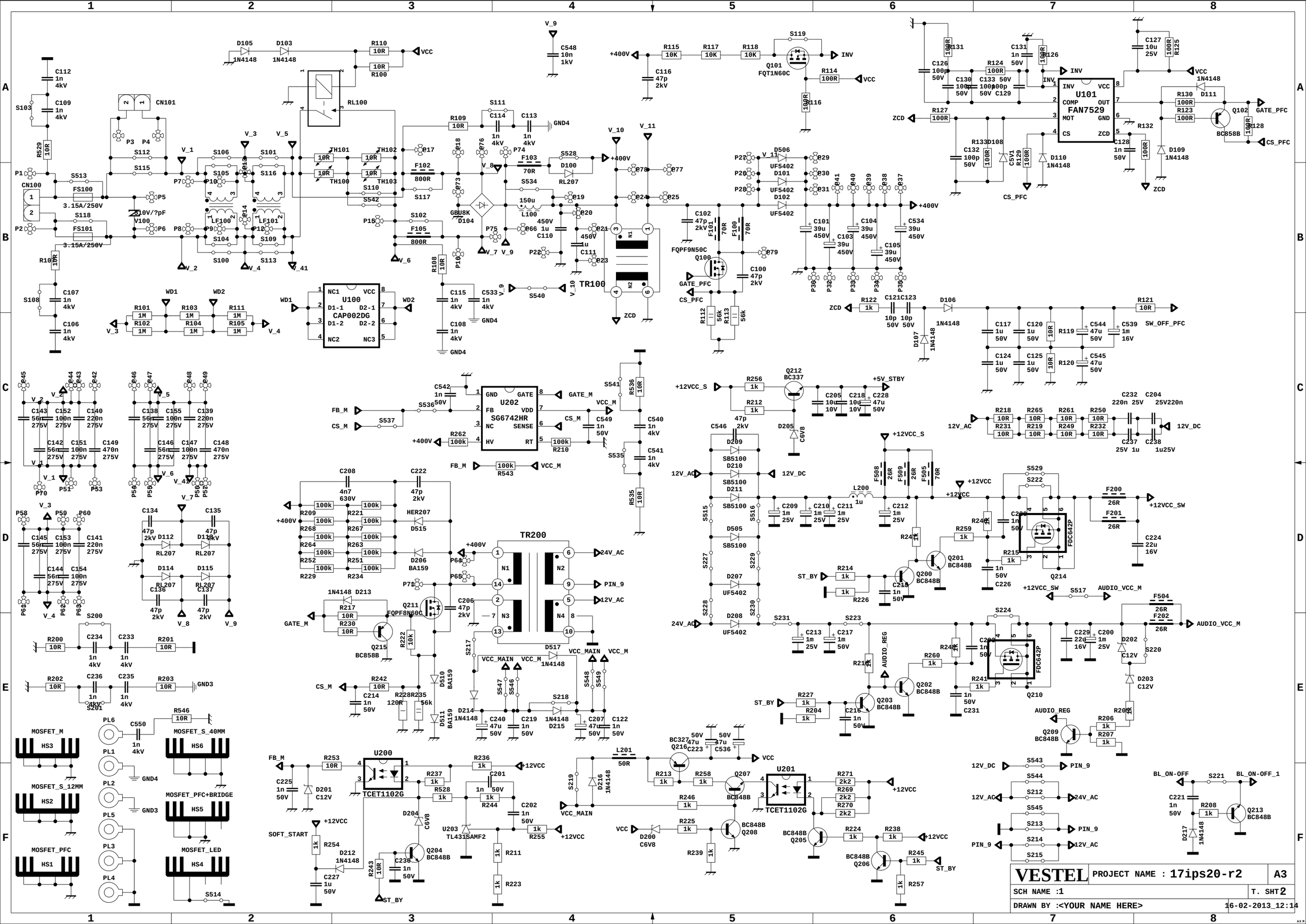

U101
FAN7529
U100
CAP002DG
U202
SG6742HR
U200
TCET1102G
U201
TCET1102G
TR100
TR200
CN100
CN101
RL100
Q100
FQPF9N50C
Q101
FQT1N60C
Q102
BC858B
Q211
FQPF8N60C
Q212
BC337
Q214
FDC642P
Q210
FDC642P
Q215
BC858B
Q216
BC327
Q207
BC848B
Q208
BC848B
Q205
BC848B
Q206
BC848B
Q209
BC848B
Q213
BC848B
Q204
BC848B
Q201
BC848B
Q200
BC848B
Q202
BC848B
Q203
BC848B
Q204
BC848B
U203
TL431SAMF2
MOSFET_M
MOSFET_S_40MM
MOSFET_S_12MM
MOSFET_PFC+BRIDGE
MOSFET_PFC
MOSFET_LED
VESTEL
PROJECT NAME : 17ips20-r2
A3
SCH NAME :1
T. SHT 2
DRAWN BY :<YOUR NAME HERE>
16-02-2013_12:14

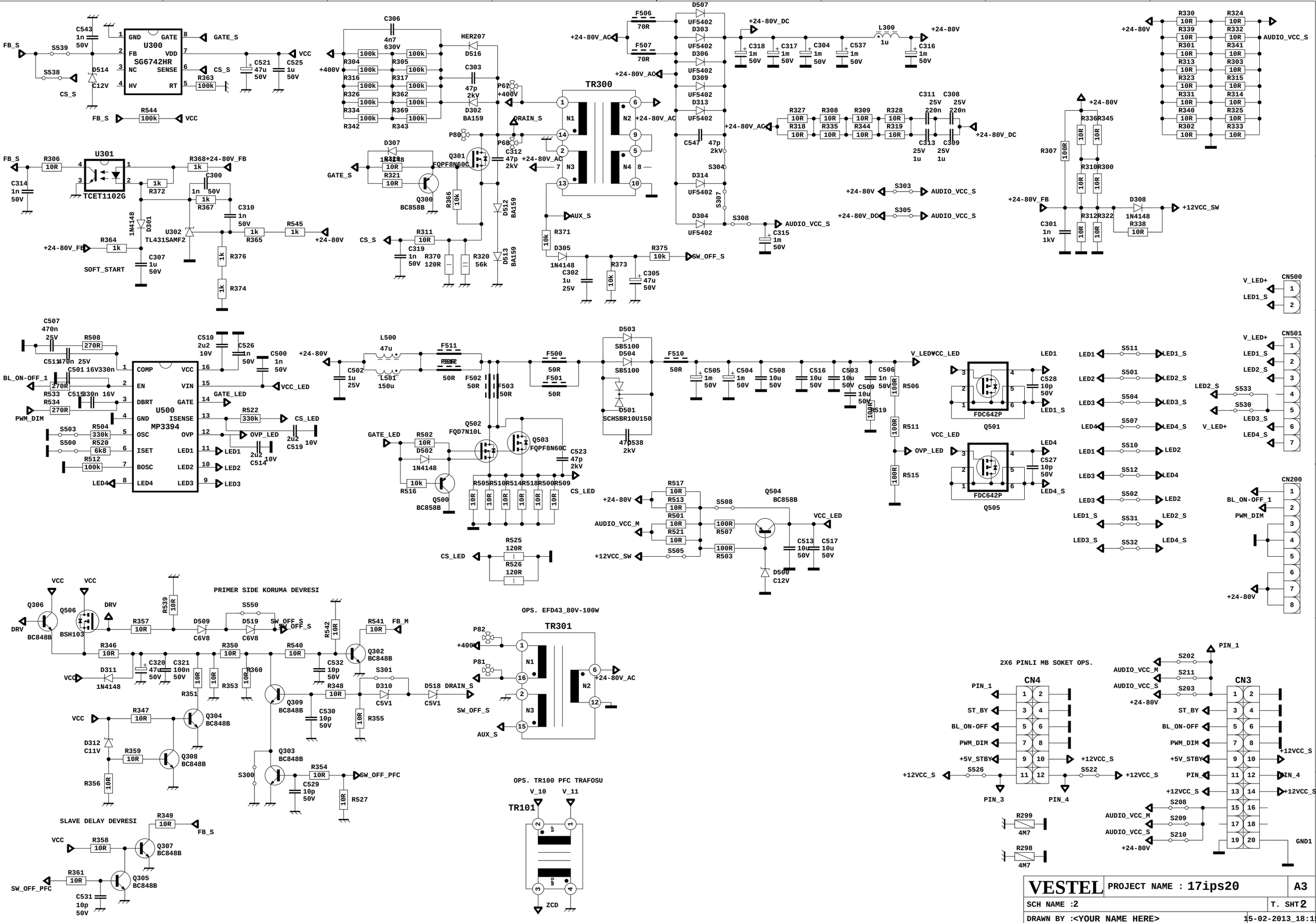

U300
SG6742HR
U301
TCET1102G
U500
MP3394
TR300
TR301
TR101
PRIMER SIDE KORUMA DEVRESI
SLAVE DELAY DEVRESI
OPS. EFD43_80V-100W
OPS. TR100 PFC TRAFOSU
2X6 PINLI MB SOKET OPS.
CN4
CN3
CN500
CN501
CN200
Q501
Q505
FDC642P
SOFT_START
VESTEL
PROJECT NAME : 17ips20
A3
SCH NAME :2
T. SHT 2
DRAWN BY :<YOUR NAME HERE>
15-02-2013_18:15