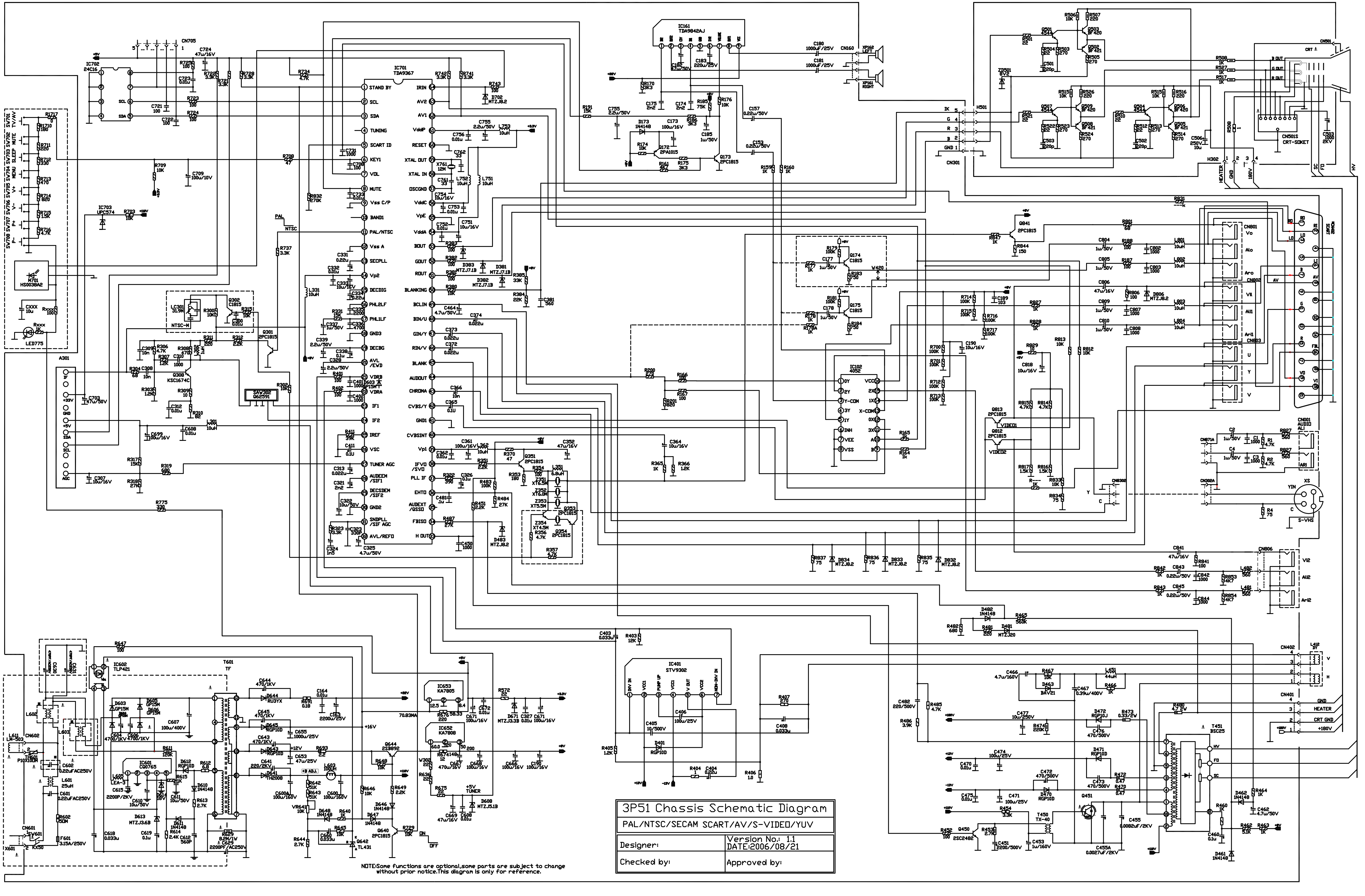

NOTE:Some functions are optional,some parts are subject to change without prior notice.This diagram is only for reference.

3P51 Chassis Schematic Diagram

PAL/NTSC/SECAM SCART/AV/S-VIDEO/YUV

Designer:	Version No.: 1.1 DATE:2006/08/21
Checked by:	Approved by: