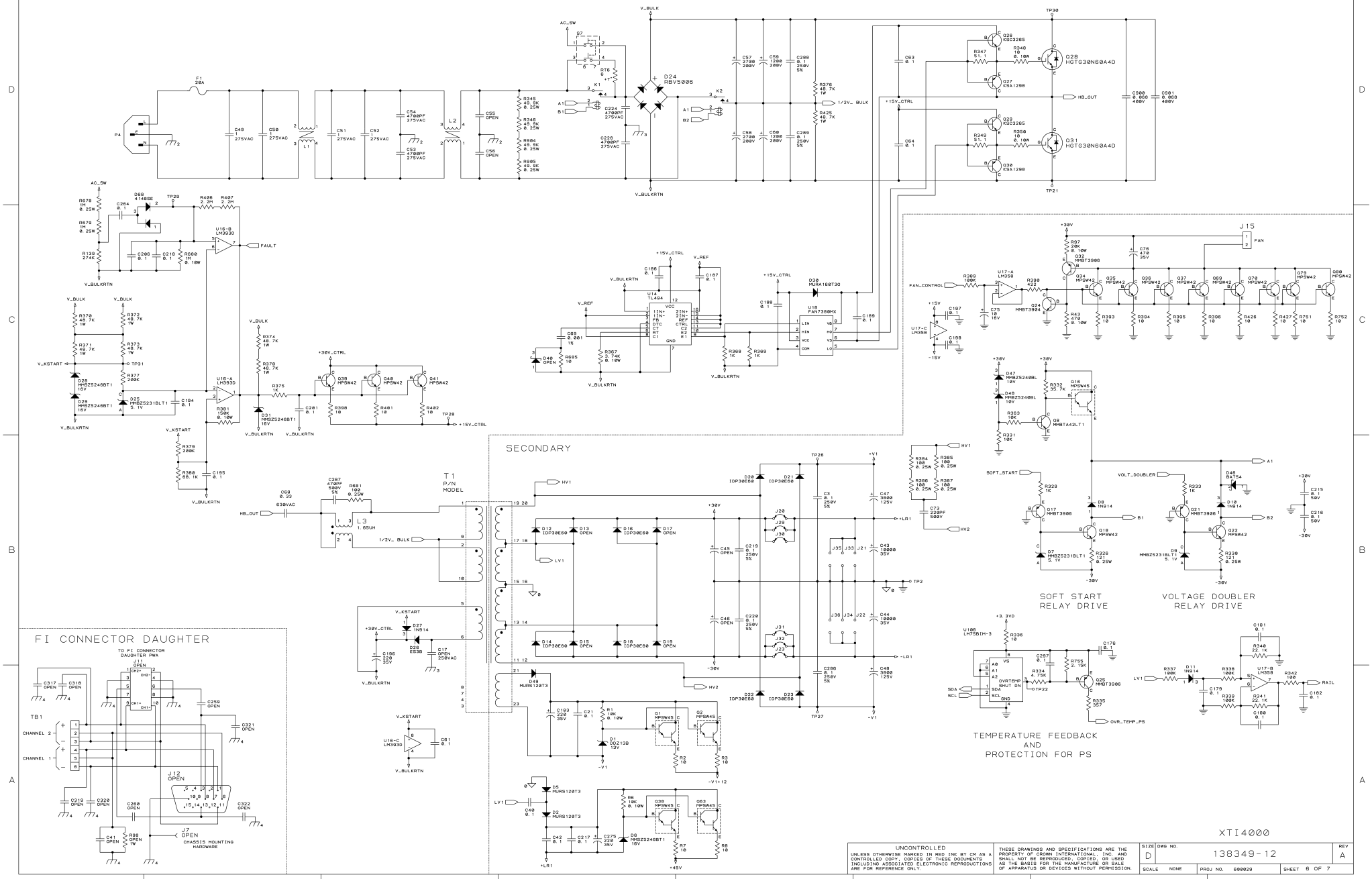
SECONDARY
FI CONNECTOR DAUGHTER
TO FI CONNECTOR DAUGHTER PWA
T1
P/N MODEL
SOFT START RELAY DRIVE
VOLTAGE DOUBLER RELAY DRIVE
TEMPERATURE FEEDBACK AND PROTECTION FOR PS
XTI4000
UNCONTROLLED
UNLESS OTHERWISE MARKED IN RED INK BY CM AS A CONTROLLED COPY, COPIES OF THESE DOCUMENTS INCLUDING ASSOCIATED ELECTRONIC REPRODUCTIONS ARE FOR REFERENCE ONLY.
THESE DRAWINGS AND SPECIFICATIONS ARE THE PROPERTY OF CROWN INTERNATIONAL, INC. AND SHALL NOT BE REPRODUCED, COPIED, OR USED AS THE BASIS FOR THE MANUFACTURE OR SALE OF APPARATUS OR DEVICES WITHOUT PERMISSION.
SIZE D
DWG NO. 138349-12
REV A
SCALE NONE
PROJ NO. 600029
SHEET 6 OF 7