A DSP Based Sine wave UPS with charger by YU3MA

PREVIEW VERSION

Features:

- DSP digital PWM modulator
- Full bridge output stage
- 3-level PWM modulation
- Over current protection
- Adjustable death-time
- Syncrhonious rectification in charger mode
- High efficiency
- Compact design

- More to come ...

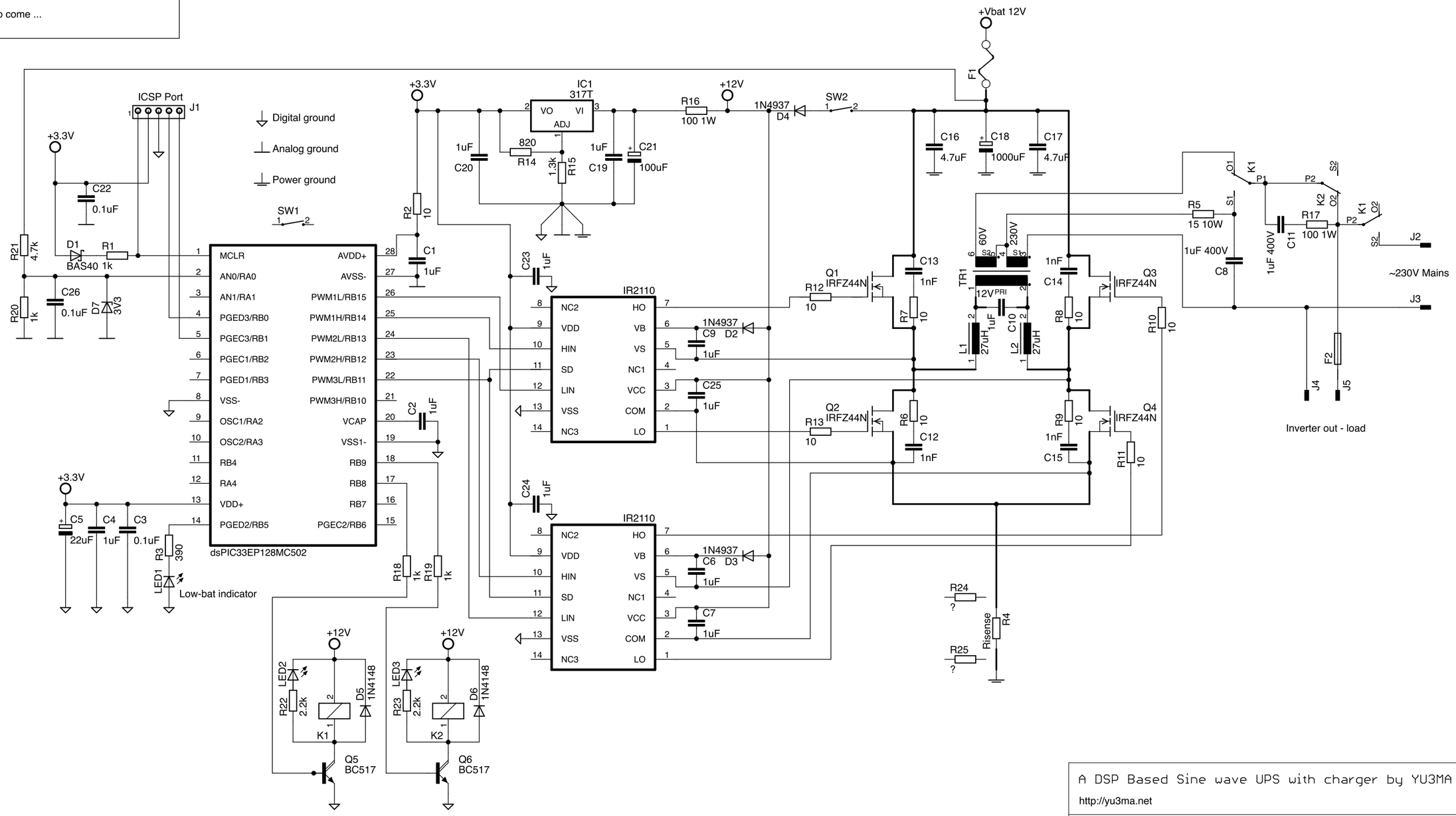

A DSP Based Sine wave UPS with charger by YU3MA

http://yu3ma.net

TITLE: dsPIC-UPS	
Document Number:	REV: 1
Date: 9/23/13 4:15 AM	Sheet: 1/1