■EMX5000-12/20 CIRCUIT DIAGRAM 8/9 (SMPS 1/2, SMPS 2/2)

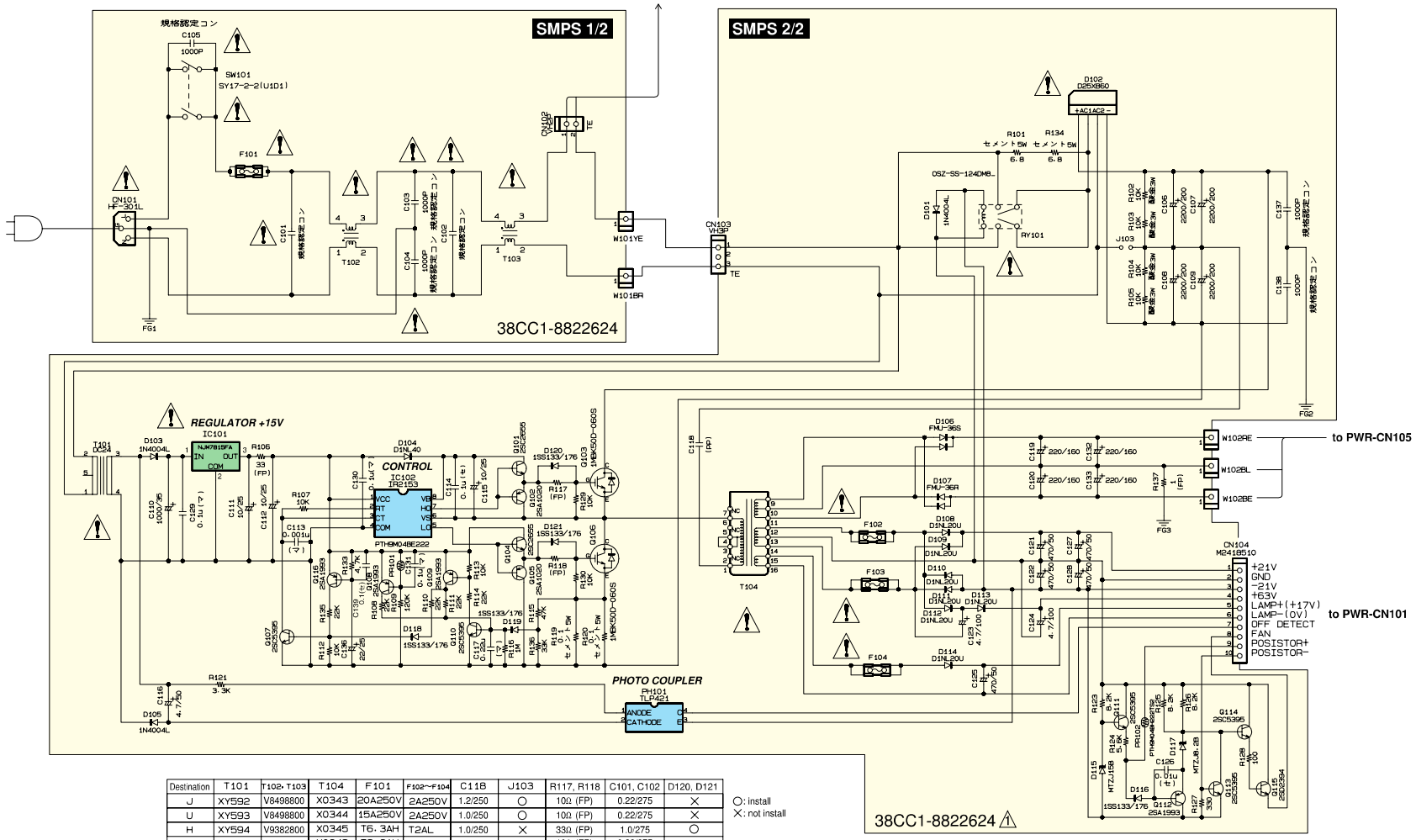

Destination	T101	T102~T103	T104	F101	F102~F104	C118	J103	R117, R118	C101, C102	D120, D121
J	XY592	V8498800	X0343	20A250V	2A250V	1.2/250	○	10Ω (FP)	0.22/275	×
U	XY593	V8498800	X0344	15A250V	2A250V	1.0/250	○	10Ω (FP)	0.22/275	×
H	XY594	V9382800	X0345	T6.3AH	T2AL	1.0/250	×	33Ω (FP)	1.0/275	○
A	XY594	V8498900	X0346	T6.3AH	T2AL	1.0/250	×	10Ω (FP)	0.22/275	×

○: install
×: not install

⚠ 印：Special characteristic