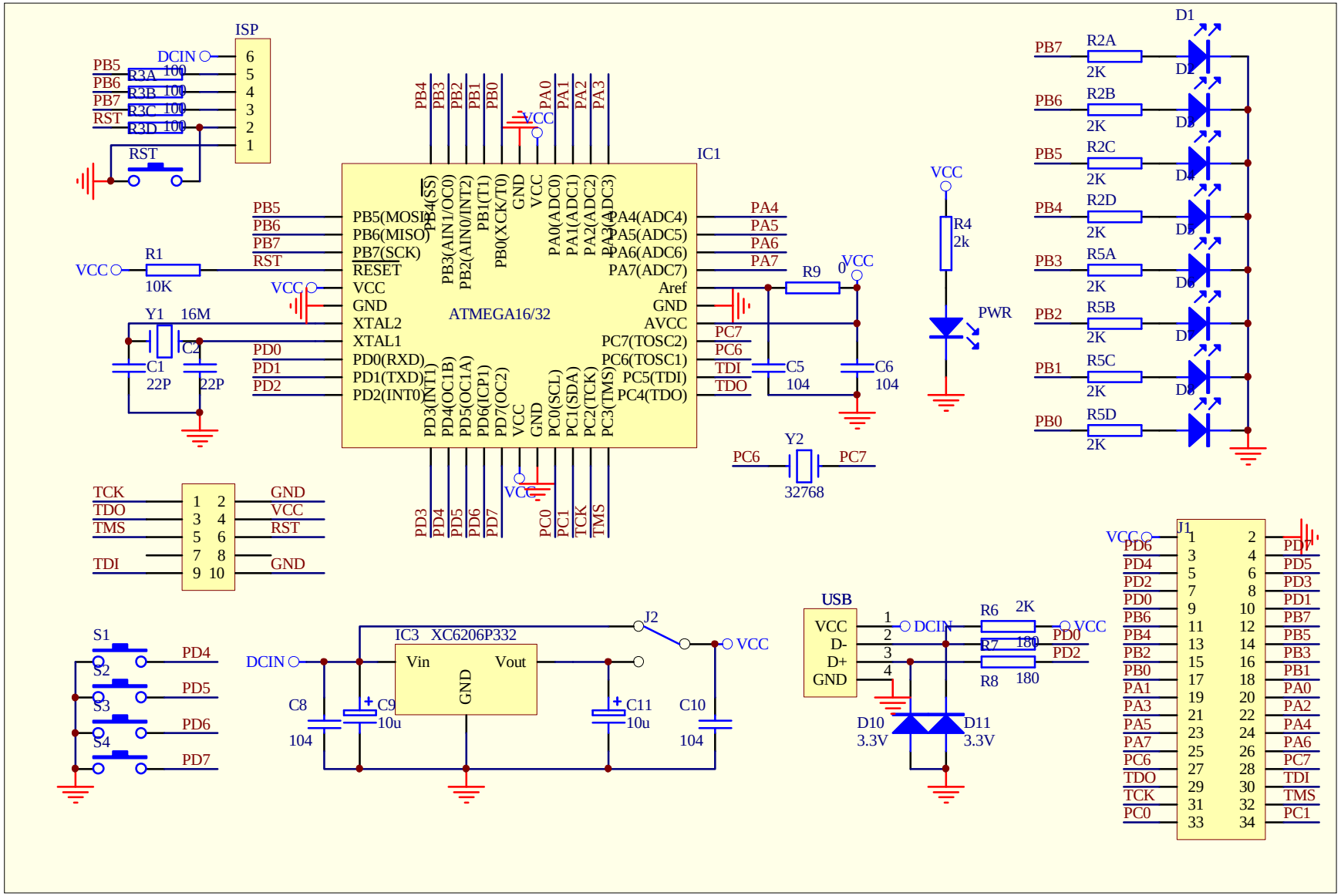
ISP
DCIN
PB5
PB6
PB7
RST
R3A 100
R3B 100
R3C 100
R3D 100
RST
IC1
ATMEGA16/32
PB5(MOSI)
PB6(MISO)
PB7(SCK)
RESET
VCC
GND
XTAL2
XTAL1
PD0(RXD)
PD1(TXD)
PD2(INT0)
PD3(INT1)
PD4(OC1B)
PD5(OC1A)
PD6(ICP1)
PD7(OC2)
PB4(SS)
PB3(AIN1/OC0)
PB2(AIN0/INT2)
PB1(T1)
PB0(XCK/T0)
PA0(ADC0)
PA1(ADC1)
PA2(ADC2)
PA3(ADC3)
PA4(ADC4)
PA5(ADC5)
PA6(ADC6)
PA7(ADC7)
Aref
AVCC
PC7(TOSC2)
PC6(TOSC1)
PC5(TDI)
PC4(TDO)
PC0(SCL)
PC1(SDA)
PC2(TCK)
PC3(TMS)
R1
10K
Y1 16M
C1 22P
C2 22P
R9 0
C5 104
C6 104
Y2 32768
PC6
PC7
R4 2k
PWR
D1
R2A 2K
R2B 2K
R2C 2K
R2D 2K
R5A 2K
R5B 2K
R5C 2K
R5D 2K
TCK
TDO
TMS
TDI
GND
VCC
RST
S1
S2
S3
S4
PD4
PD5
PD6
PD7
DCIN
IC3 XC6206P332
Vin
Vout
GND
C8 104
C9 10u
C11 10u
C10 104
J2
USB
VCC
D-
D+
GND
R6 2K
R7 180
R8 180
D10 3.3V
D11 3.3V
J1
PD0
PD2
PD1
PB7
PB1
PA0
PA2
PA4
PA6
PC7
TDI
TMS
PC1
PC0