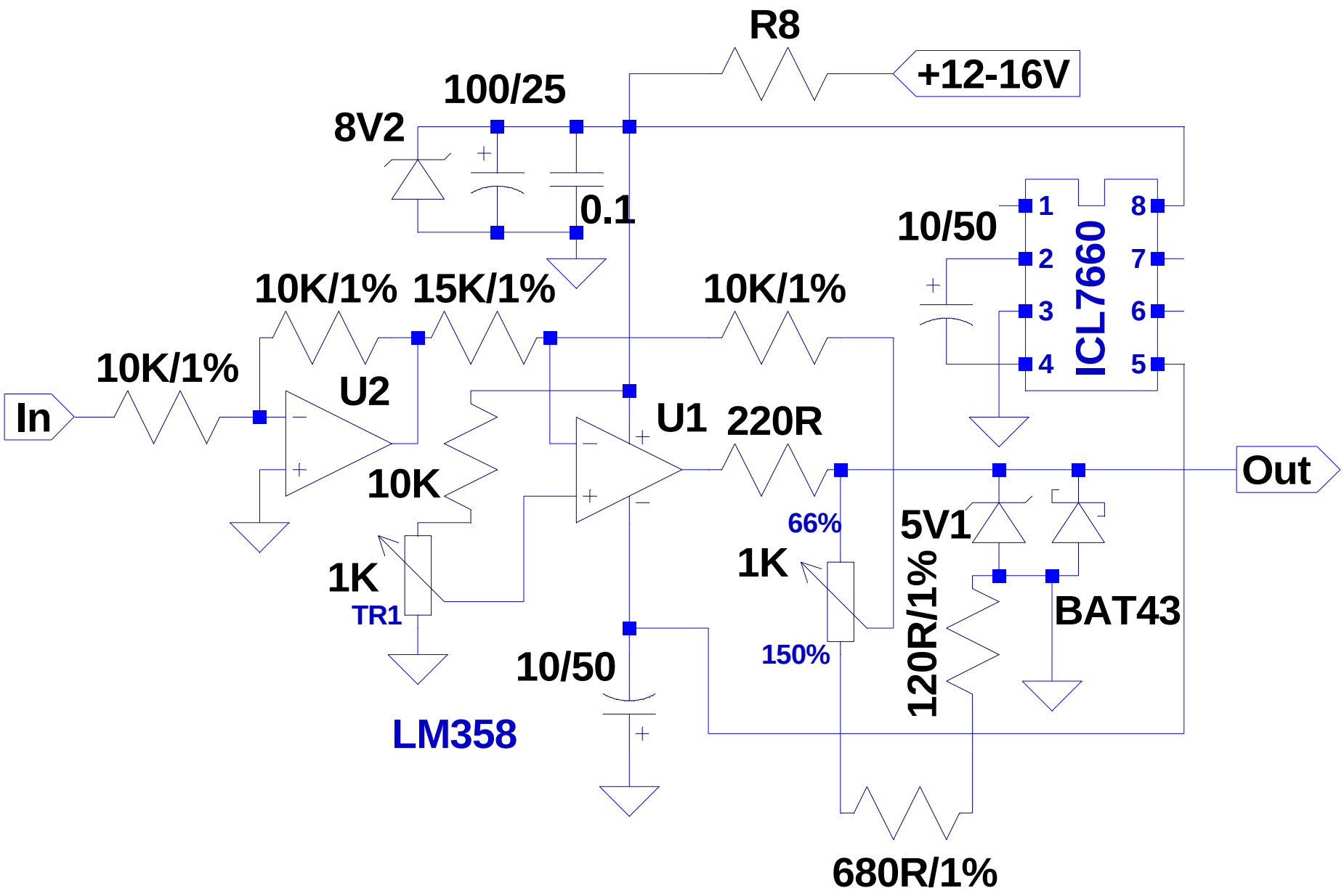

--- C:\Program Files\LTC\LTspiceIV\kutijica.asc ---