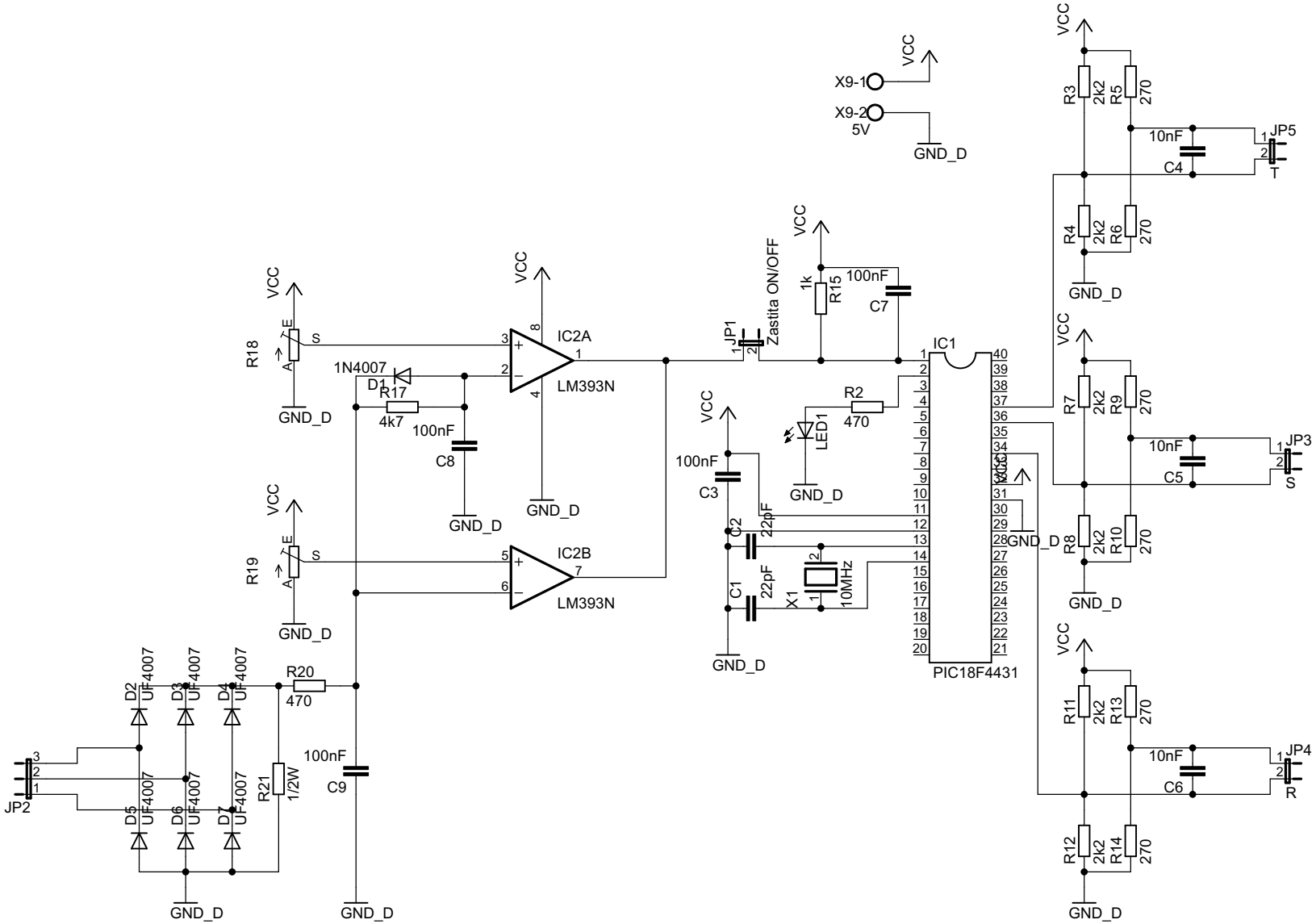
X9-1
X9-2
5V
VCC
GND_D
R3
2k2
R5
270
R4
R6
10nF
C4
JP5
T
R7
R9
C5
JP3
S
R8
R10
R11
R13
C6
JP4
R
R12
R14
IC1
PIC18F4431
R15
1k
C7
100nF
JP1
Zastita ON/OFF
R2
470
LED1
C3
C2
22pF
C1
X1
10MHz
IC2A
IC2B
LM393N
R18
R19
E
S
A
D1
1N4007
R17
4k7
C8
C9
R20
R21
1/2W
D2
D3
D4
D5
D6
D7
UF4007
JP2