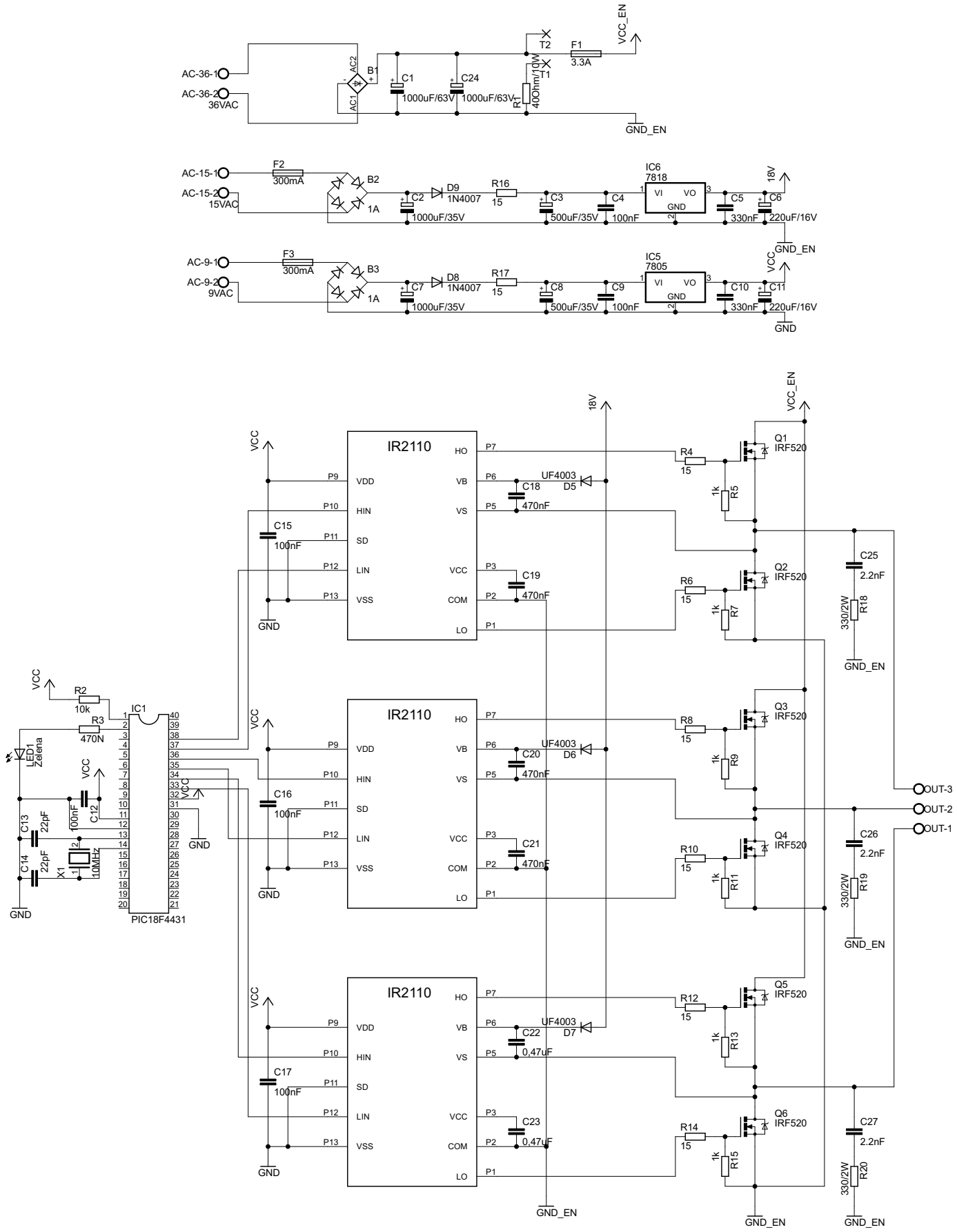
AC-36-1
AC-36-2
36VAC
AC2
AC1
B1
C1
1000uF/63V
C24
1000uF/63V
R1
40Ohm/10W
T2
T1
F1
3.3A
VCC_EN
GND_EN
AC-15-1
AC-15-2
15VAC
F2
300mA
B2
1A
C2
1000uF/35V
D9
1N4007
R16
15
C3
500uF/35V
C4
100nF
IC6
7818
VI
VO
GND
C5
330nF
C6
220uF/16V
18V
GND_EN
AC-9-1
AC-9-2
9VAC
F3
300mA
B3
1A
C7
1000uF/35V
D8
1N4007
R17
15
C8
500uF/35V
C9
100nF
IC5
7805
C10
330nF
C11
220uF/16V
VCC
GND
IR2110
HO
VB
VS
VCC
COM
LO
VDD
HIN
SD
LIN
VSS
P7
P6
P5
P3
P2
P1
P9
P10
P11
P12
P13
UF4003
D5
D6
D7
C18
470nF
C19
470nF
C20
470nF
C21
470nF
C22
0,47uF
C23
0,47uF
C15
100nF
C16
100nF
C17
100nF
R4
R6
R8
R10
R12
R14
15
1k
R5
R7
R9
R11
R13
R15
Q1
Q2
Q3
Q4
Q5
Q6
IRF520
C25
C26
C27
2.2nF
330/2W
R18
R19
R20
OUT-3
OUT-2
OUT-1
R2
10k
R3
470N
IC1
PIC18F4431
LED1
Zelena
C12
100nF
C13
22pF
C14
22pF
X1
10MHz