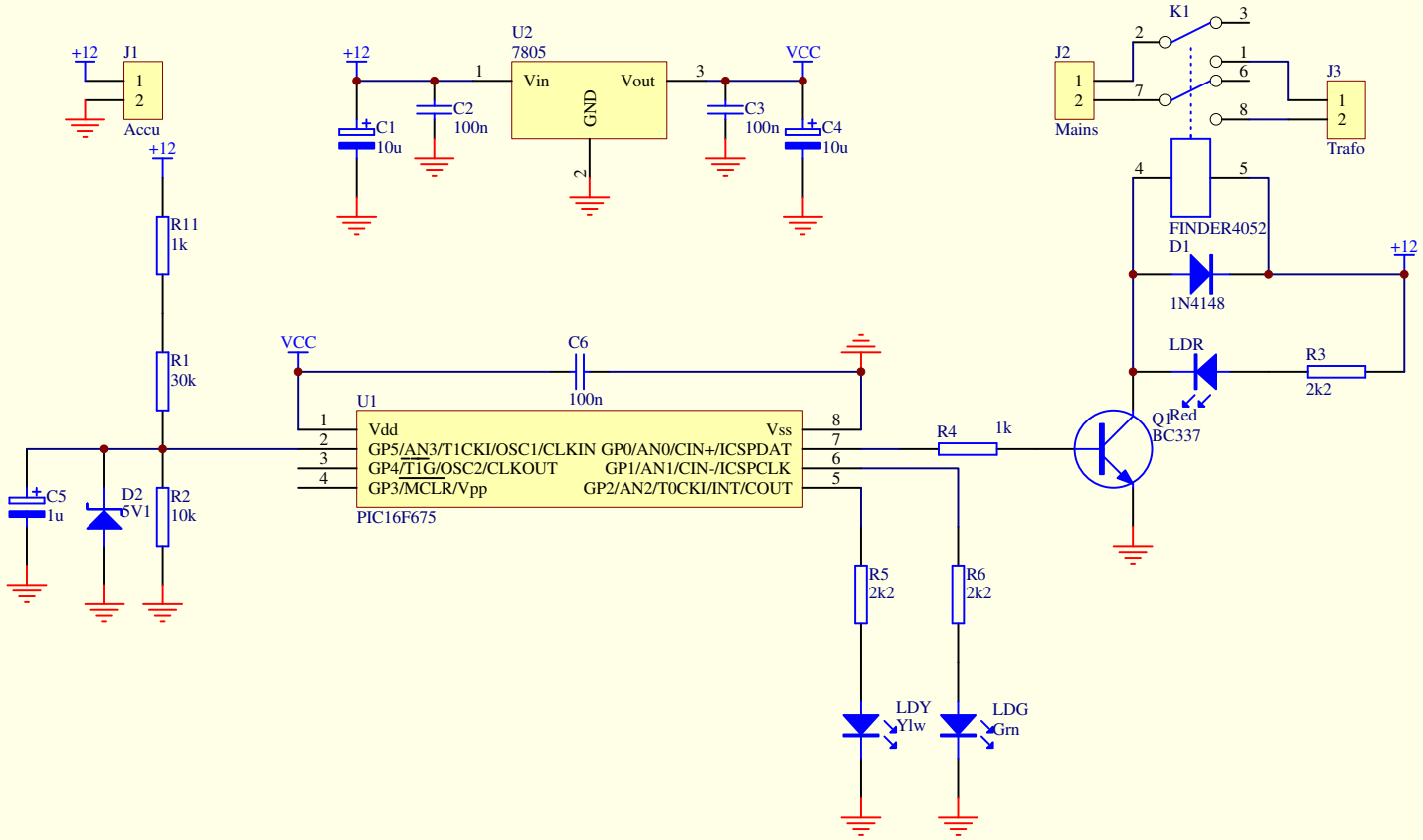
+12
J1
Accu
U2
7805
Vin
Vout
GND
C1
10u
C2
100n
C3
100n
C4
10u
VCC
J2
Mains
K1
J3
Trafo
FINDER4052
D1
1N4148
LDR
R3
2k2
Q1
BC337
Red
R11
1k
R1
30k
R2
10k
C5
1u
D2
5V1
C6
100n
U1
Vdd
Vss
GP5/AN3/T1CKI/OSC1/CLKIN
GP0/AN0/CIN+/ICSPDAT
GP4/T1G/OSC2/CLKOUT
GP1/AN1/CIN-/ICSPCLK
GP3/MCLR/Vpp
GP2/AN2/T0CKI/INT/COUT
PIC16F675
R4
1k
R5
2k2
R6
2k2
LDY
Ylw
LDG
Grn