GOLDSTAR STDIOWORKS 56M

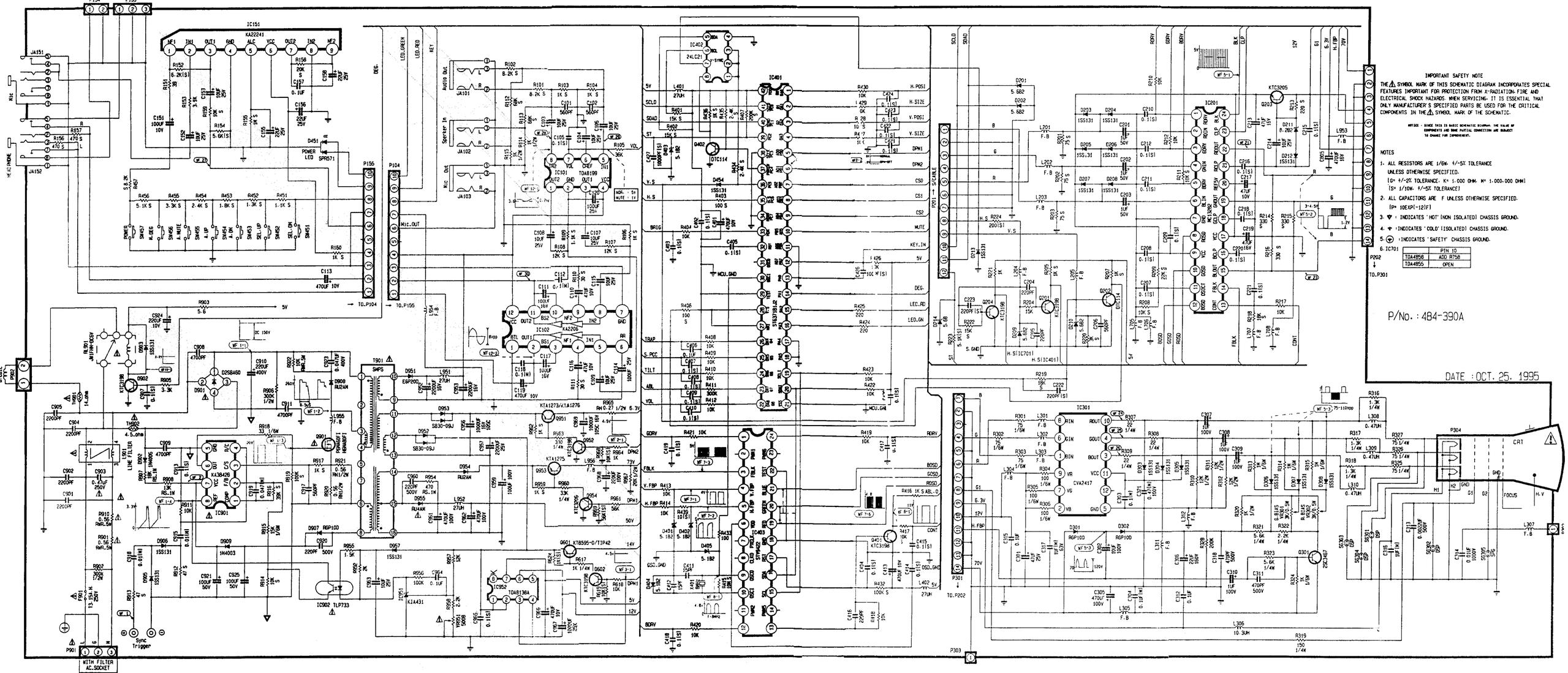

IMPORTANT SAFETY NOTE

THE ⚠ SYMBOL MARK OF THIS SCHEMATIC DIAGRAM INCORPORATES SPECIAL FEATURES IMPORTANT FOR PROTECTION FROM X-RADIATION FIRE AND ELECTRICAL SHOCK HAZARDS. WHEN SERVICING IT IS ESSENTIAL THAT ONLY MANUFACTURER'S SPECIFIED PARTS BE USED FOR THE CRITICAL COMPONENTS IN THE ⚠ SYMBOL MARK OF THE SCHEMATIC.

NOTICE : SINCE THIS IS BASIC SCHEMATIC DIAGRAM, THE VALUE OF COMPONENTS AND SOME PARTIAL CONNECTION ARE SUBJECT TO CHANGE FOR IMPROVEMENT.

NOTES

1. ALL RESISTORS ARE 1/6W. +/-5% TOLERANCE UNLESS OTHERWISE SPECIFIED.
   (G= +/-2% TOLERANCE. K= 1.000 OHM. M= 1.000.000 OHM)
   (5= 1/10W. +/-5% TOLERANCE)
2. ALL CAPACITORS ARE F UNLESS OTHERWISE SPECIFIED.
   (P= 10EXP(-12)F)
3. ⏚ : INDICATES 'HOT' (NON ISOLATED) CHASSIS GROUND.
4. ⏚ : INDICATES 'COLD' (ISOLATED) CHASSIS GROUND.
5. ⏚ : INDICATES 'SAFETY' CHASSIS GROUND.
6. IC701

PIN 10
TDA4856 ADD R758
TDA4855 OPEN

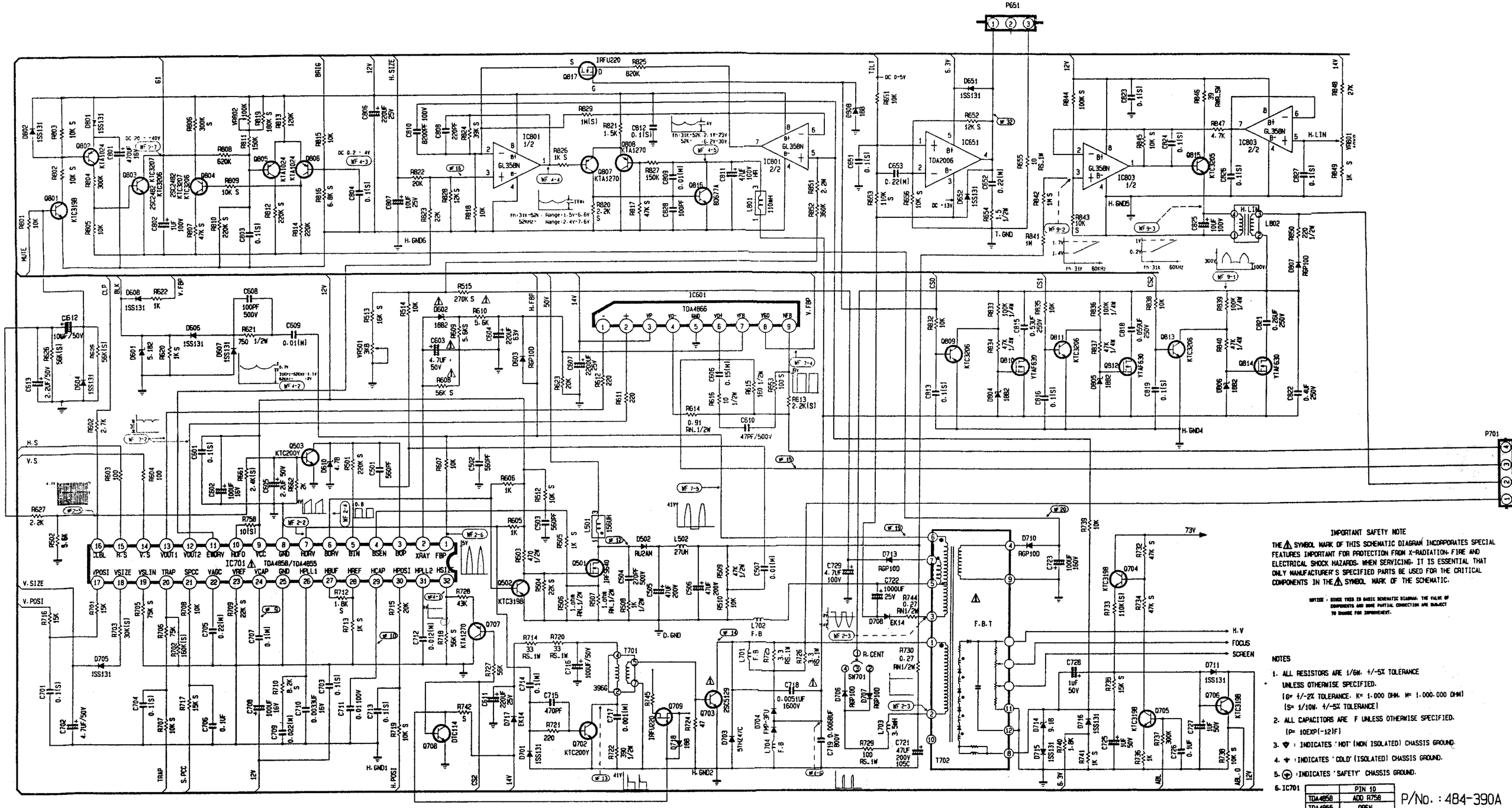

IMPORTANT SAFETY NOTE

THE ⚠ SYMBOL MARK OF THIS SCHEMATIC DIAGRAM INCORPORATES SPECIAL FEATURES INPORTANT FOR PROTECTION FROM X-RADIATION. FIRE AND ELECTRICAL SHOCK HAZARDS. WHEN SERVICING, IT IS ESSENTIAL THAT ONLY MANUFACTURER'S SPECIFIED PARTS BE USED FOR THE CRITICAL COMPONENTS IN THE ⚠ SYMBOL MARK OF THE SCHEMATIC.

NOTICE : SINCE THIS IS BASIC SCHEMATIC DIAGRAM, THE VALUE OF COMPONENTS AND WIRE PARTIAL CONNECTION ARE SUBJECT TO CHANGE FOR IMPROVEMENT.

NOTES

1. ALL RESISTORS ARE 1/6W. +/-5% TOLERANCE UNLESS OTHERWISE SPECIFIED.
   (G= +/-2% TOLERANCE. K= 1.000 OHM. M= 1.000.000 OHM)
   (S= 1/10W. +/-5% TOLERANCE)
2. ALL CAPACITORS ARE F UNLESS OTHERWISE SPECIFIED.
   (P= 10EXP(-12)F)
3. ⏚ : INDICATES 'HOT' (NON ISOLATED) CHASSIS GROUND.
4. ⏚ : INDICATES 'COLD' (ISOLATED) CHASSIS GROUND.
5. ⊕ : INDICATES 'SAFETY' CHASSIS GROUND.
6. IC701

	PIN 10
TDA4858	ADD R758
TDA4855	OPEN

P/No. : 484-390A