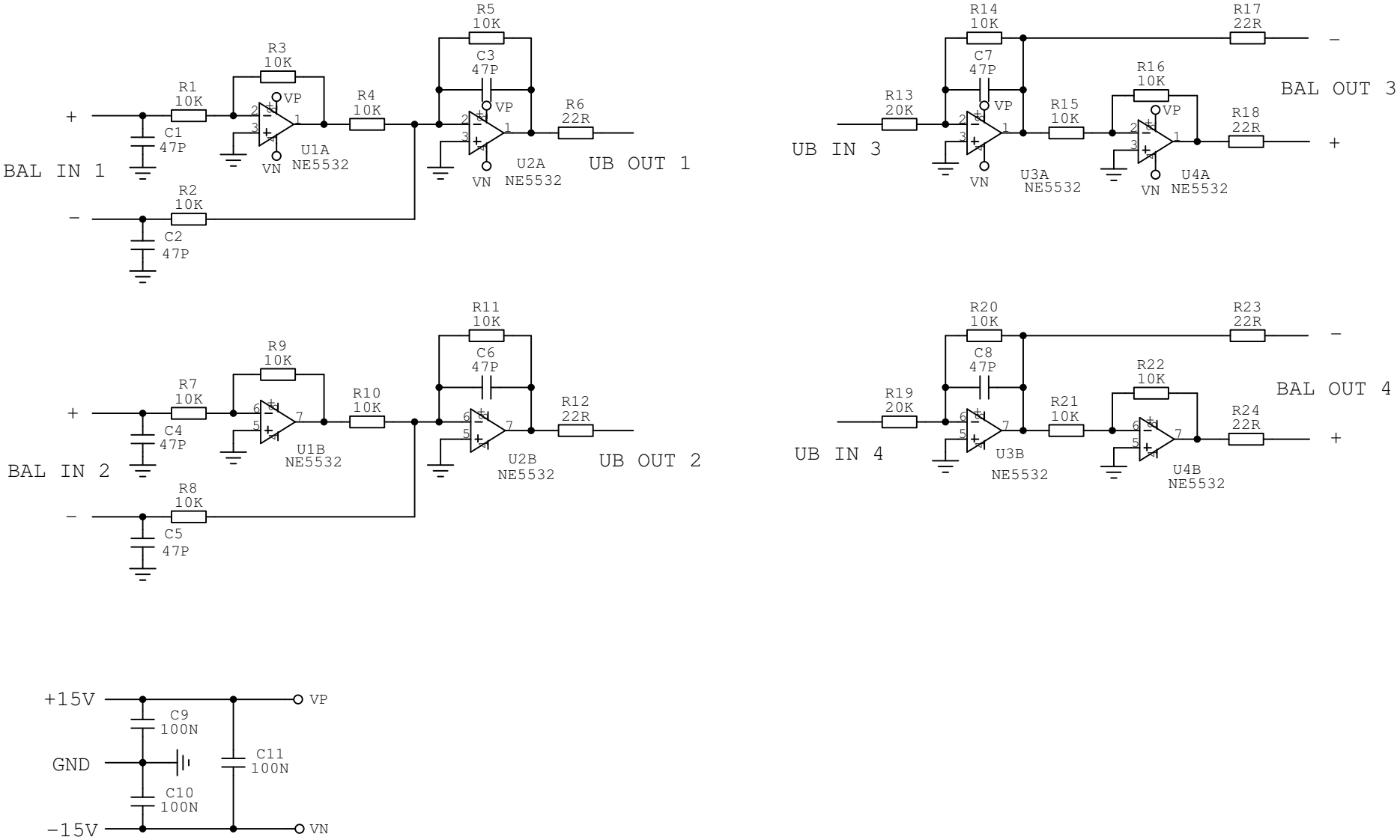

Rev	ID BALANCING CARD / AUDIOX	
	Date: 5.9.2008	Page: 1 of 1