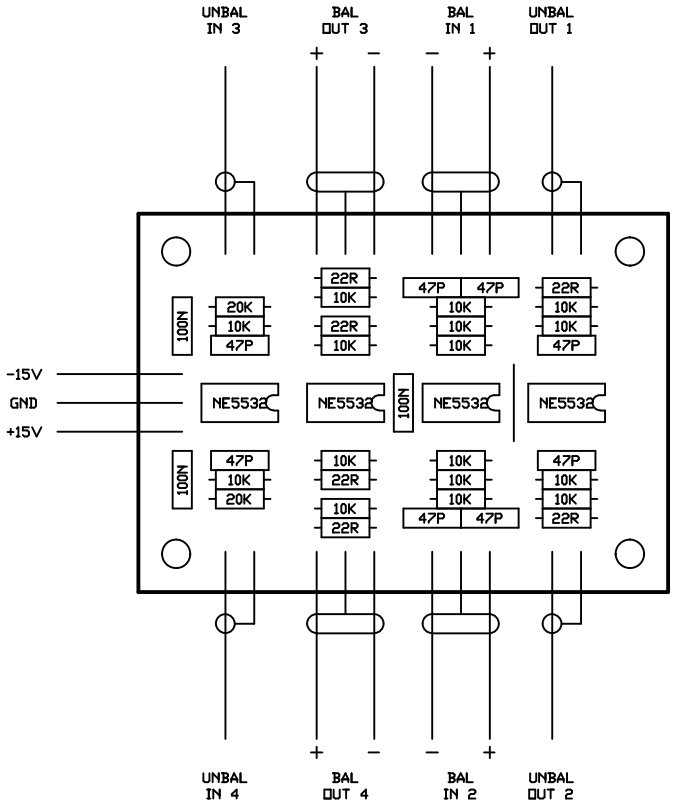
UNBAL IN 3
BAL OUT 3
BAL IN 1
UNBAL OUT 1
+
−
−
+
22R
10K
47P
47P
22R
10K
20K
10K
47P
100N
10K
10K
10K
10K
10K
10K
47P
-15V
GND
+15V
NE553a
NE553a
100N
NE553a
NE553a
100N
47P
10K
20K
10K
22R
10K
10K
10K
10K
47P
10K
10K
22R
47P
47P
22R
+
−
−
+
UNBAL IN 4
BAL OUT 4
BAL IN 2
UNBAL OUT 2