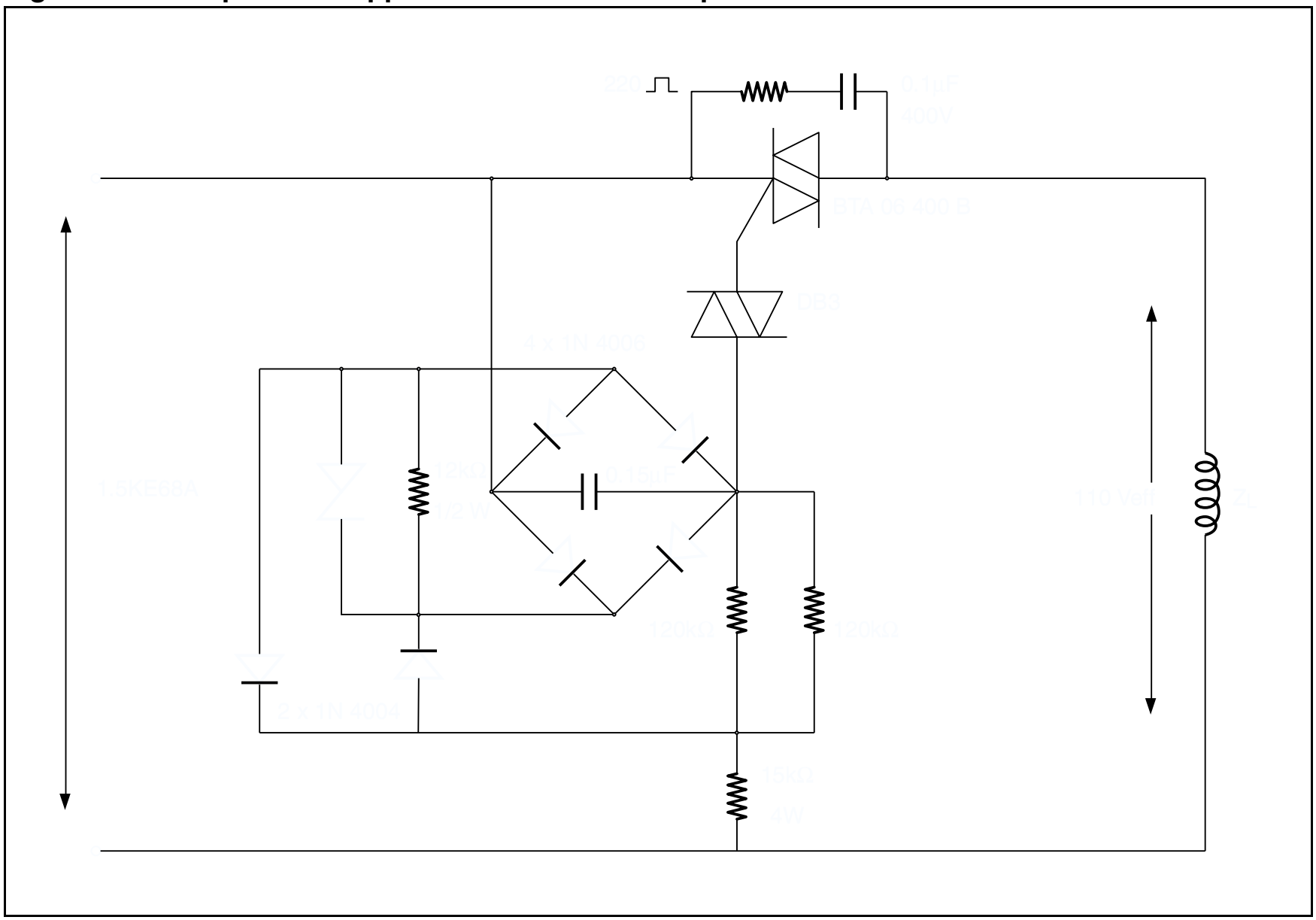Figure 10. Example of an Application: 220/110 V Step-down Circuit