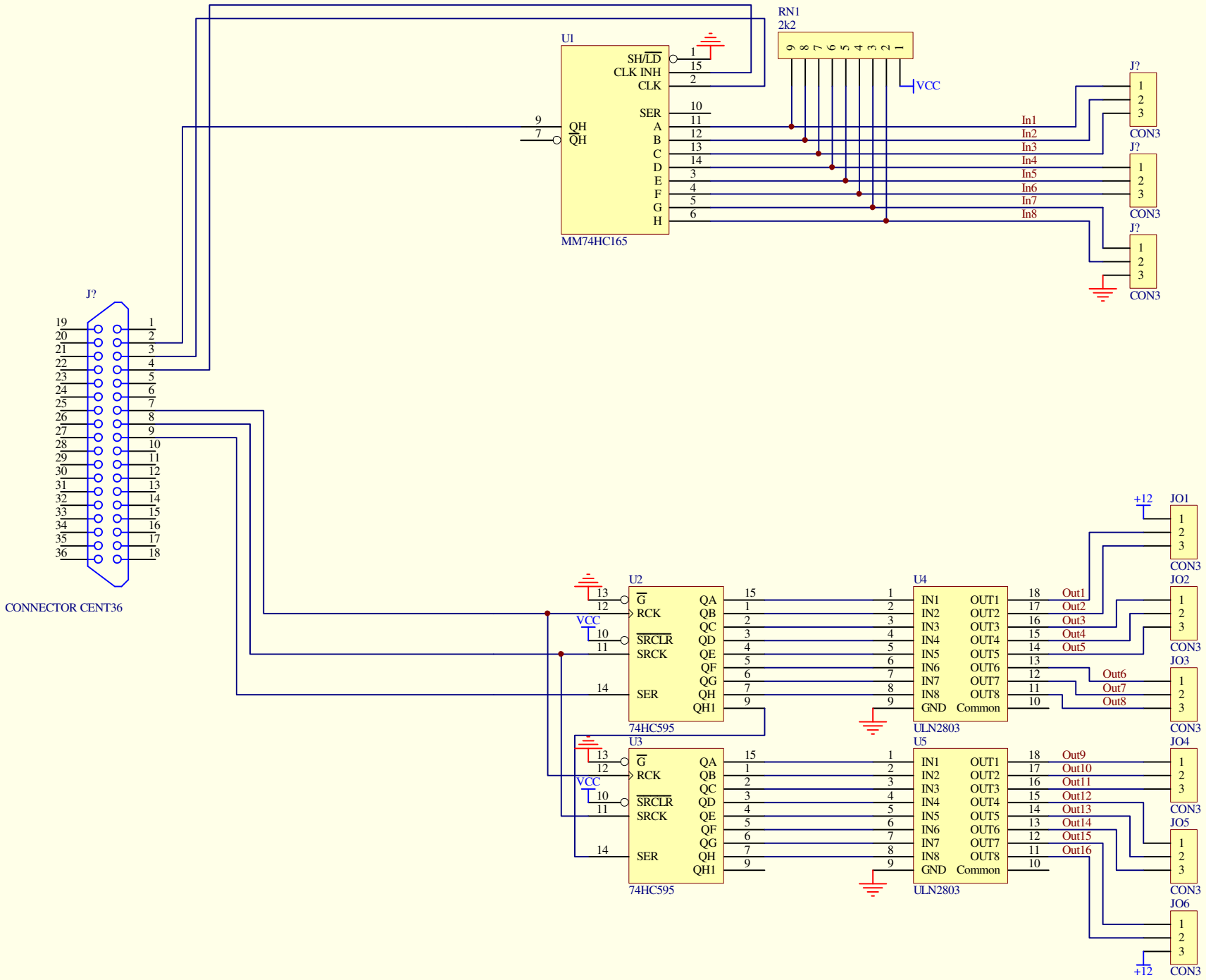
U1
SH/LD
CLK INH
CLK
SER
QH
QH
A
B
C
D
E
F
G
H
MM74HC165
RN1
2k2
VCC
J?
CON3
In1
In2
In3
In4
In5
In6
In7
In8
J?
CONNECTOR CENT36
U2
G
RCK
SRCLR
SRCK
SER
QA
QB
QC
QD
QE
QF
QG
QH
QH1
74HC595
U3
74HC595
U4
IN1
IN2
IN3
IN4
IN5
IN6
IN7
IN8
GND
OUT1
OUT2
OUT3
OUT4
OUT5
OUT6
OUT7
OUT8
Common
ULN2803
U5
ULN2803
+12
JO1
JO2
JO3
JO4
JO5
JO6
Out1
Out2
Out3
Out4
Out5
Out6
Out7
Out8
Out9
Out10
Out11
Out12
Out13
Out14
Out15
Out16