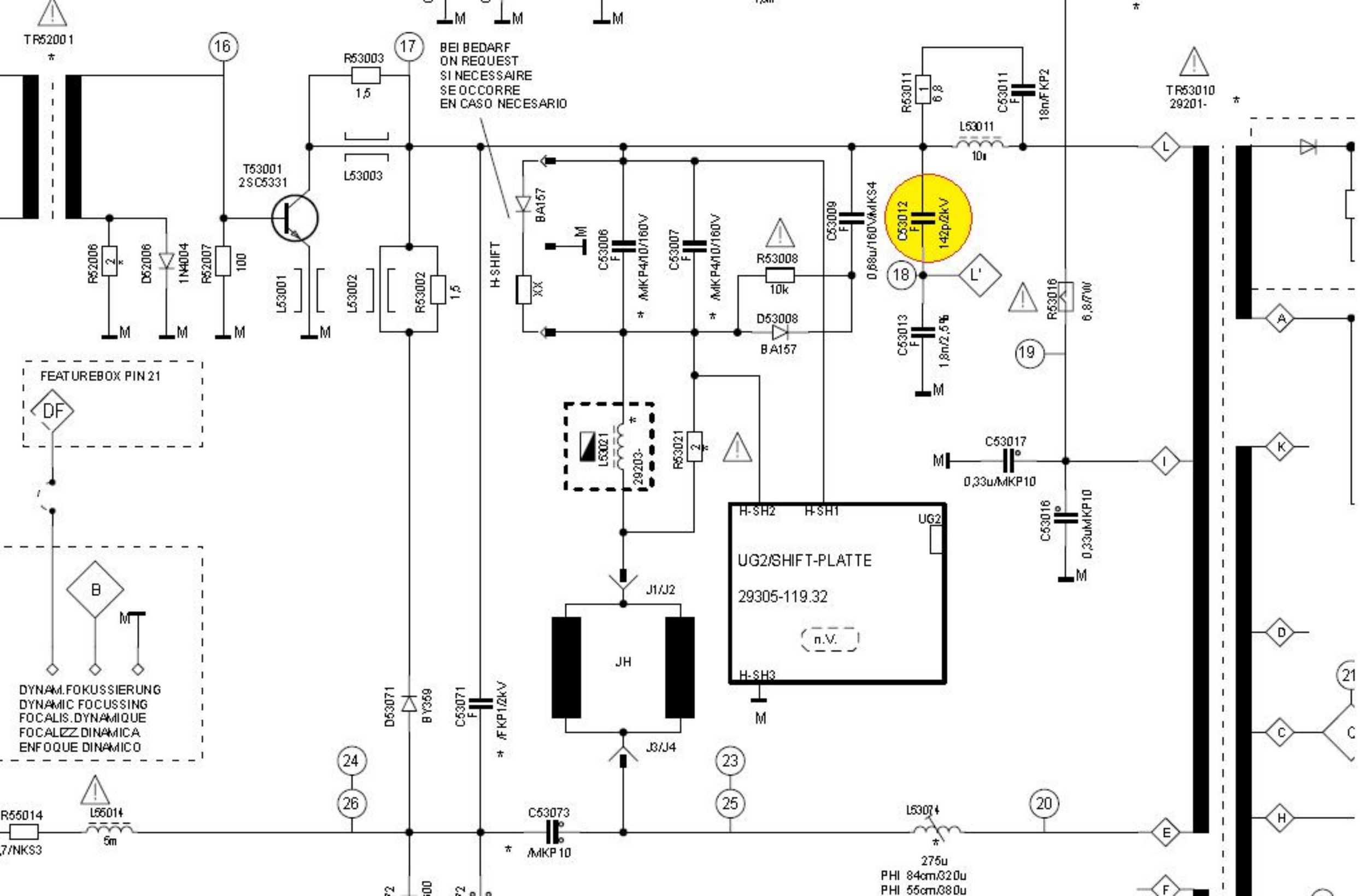
TR52001
BEI BEDARF
ON REQUEST
SI NECESSAIRE
SE OCCORRE
EN CASO NECESARIO
R53003
1,5
T53001
2SC5331
L53003
R52006
D52006
1N4004
R52007
100
L53001
L53002
R53002
1,5
H-SHIFT
BA157
XX
C53006
MKP4/10/160V
C53007
MKP4/10/160V
R53008
10k
D53008
BA157
C53009
0,68u/160V/MKS4
C53012
142p/2kV
R53011
6,8
C53011
18n/FKP2
L53011
10u
C53013
1,8n/2,5%
R53016
6,8/1W
TR53010
29201-
FEATUREBOX PIN 21
DF
B
DYNAM.FOKUSSIERUNG
DYNAMIC FOCUSSING
FOCALIS.DYNAMIQUE
FOCALIZZ.DINAMICA
ENFOQUE DINAMICO
L53021
29203-
R53021
H-SH2
H-SH1
UG2
UG2/SHIFT-PLATTE
29305-119.32
n.V.
H-SH3
C53017
0,33u/MKP10
C53016
0,33uMKP10
J1/J2
JH
J3/J4
D53071
BY359
C53071
/FKP1/2kV
R55014
7/NKS3
L55014
5m
C53073
/MKP10
L53074
275u
PHI 84cm/320u
PHI 55cm/380u