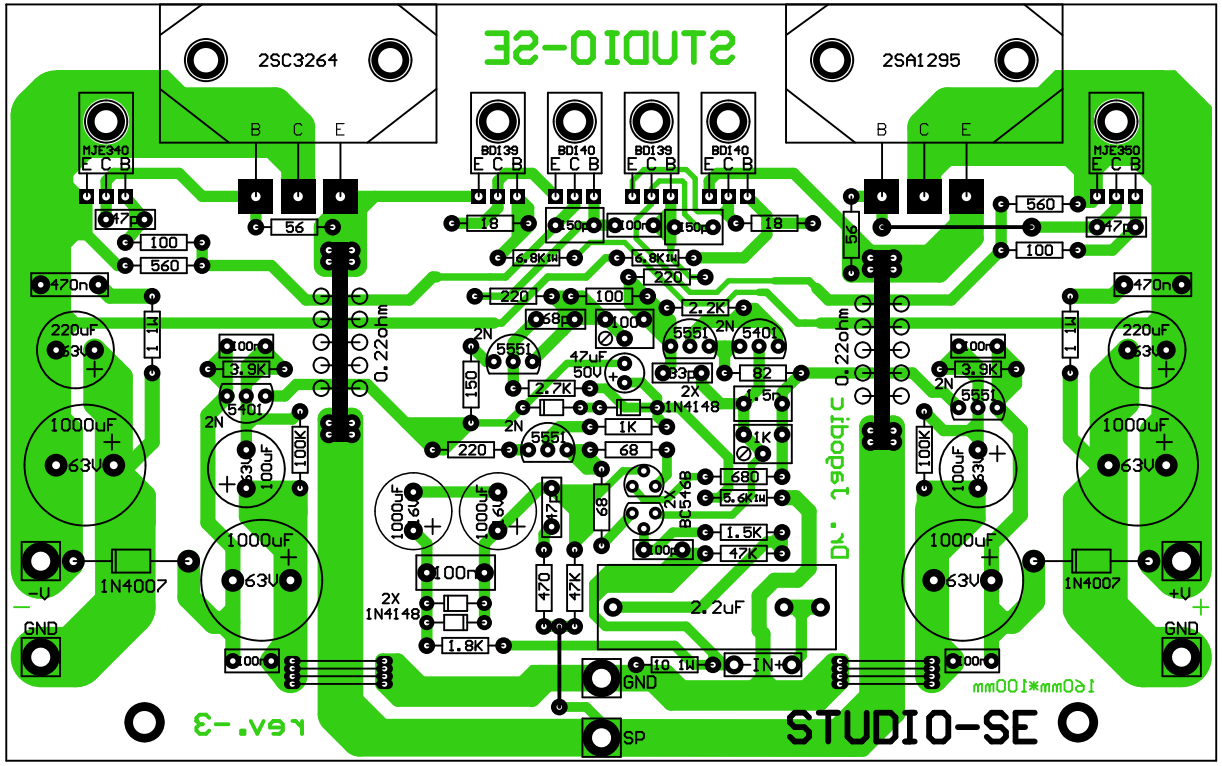
STUDIO-SE
2SC3264
2SA1295
B C E
MJE340
MJE350
BD139
BD140
E C B
47p
100
560
470n
220uF
63V
1 1W
1000uF
63V
1N4007
-V
+V
GND
0.22ohm
3.9K
5401
2N
100K
100uF
63V
56
18
6.8K1W
50p
100n
220
68p
150
5551
47uF
50V
2.7K
1K
68
2X
1N4148
1.8K
470
47K
2.2K
83p
82
1.5p
680
5.6K1W
1.5K
2.2uF
10 1W
IN+
SP
160mm*100mm
rev.-3