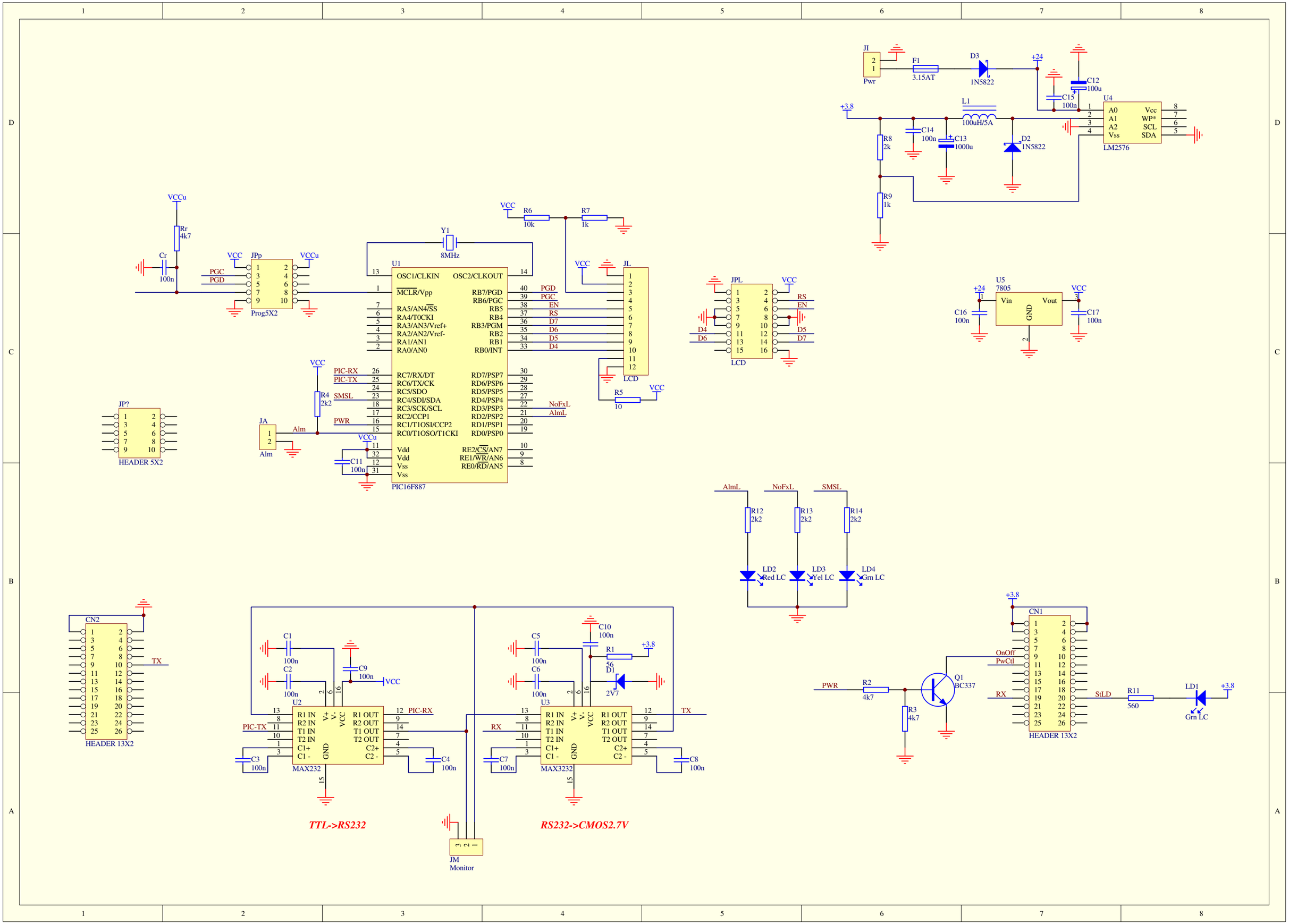
JI
Pwr
F1
3.15AT
D3
1N5822
+24
C12
100u
C15
100n
U4
LM2576
A0
A1
A2
Vss
Vcc
WP*
SCL
SDA
+3.8
L1
100uH/5A
C14
100n
C13
1000u
D2
1N5822
R8
2k
R9
1k
VCCu
Rr
4k7
Cr
100n
VCC
JPp
Prog5X2
PGC
PGD
Y1
8MHz
R6
10k
R7
1k
U1
PIC16F887
OSC1/CLKIN
OSC2/CLKOUT
MCLR/Vpp
RA5/AN4/SS
RA4/T0CKI
RA3/AN3/Vref+
RA2/AN2/Vref-
RA1/AN1
RA0/AN0
RB7/PGD
RB6/PGC
RB5
RB4
RB3/PGM
RB2
RB1
RB0/INT
RC7/RX/DT
RC6/TX/CK
RC5/SDO
RC4/SDI/SDA
RC3/SCK/SCL
RC2/CCP1
RC1/T1OSI/CCP2
RC0/T1OSO/T1CKI
RD7/PSP7
RD6/PSP6
RD5/PSP5
RD4/PSP4
RD3/PSP3
RD2/PSP2
RD1/PSP1
RD0/PSP0
Vdd
Vdd
Vss
Vss
RE2/CS/AN7
RE1/WR/AN6
RE0/RD/AN5
JL
LCD
R5
10
JPL
LCD
RS
EN
D4
D5
D6
D7
U5
7805
Vin
Vout
GND
C16
100n
C17
100n
PIC-RX
PIC-TX
SMSL
PWR
NoFxL
AlmL
R4
2k2
JA
Alm
C11
100n
JP?
HEADER 5X2
R12
2k2
R13
2k2
R14
2k2
LD2
Red LC
LD3
Yel LC
LD4
Grn LC
CN2
HEADER 13X2
TX
C1
100n
C2
100n
C9
100n
U2
MAX232
R1 IN
R2 IN
T1 IN
T2 IN
C1+
C1 -
V+
V-
VCC
GND
R1 OUT
R2 OUT
T1 OUT
T2 OUT
C2+
C2 -
C3
100n
C4
100n
C5
100n
C6
100n
C10
100n
R1
56
D1
2V7
U3
MAX3232
C7
100n
C8
100n
RX
JM
Monitor
TTL->RS232
RS232->CMOS2.7V
CN1
HEADER 13X2
OnOff
PwCtl
PWR
R2
4k7
R3
4k7
Q1
BC337
StLD
R11
560
LD1
Grn LC