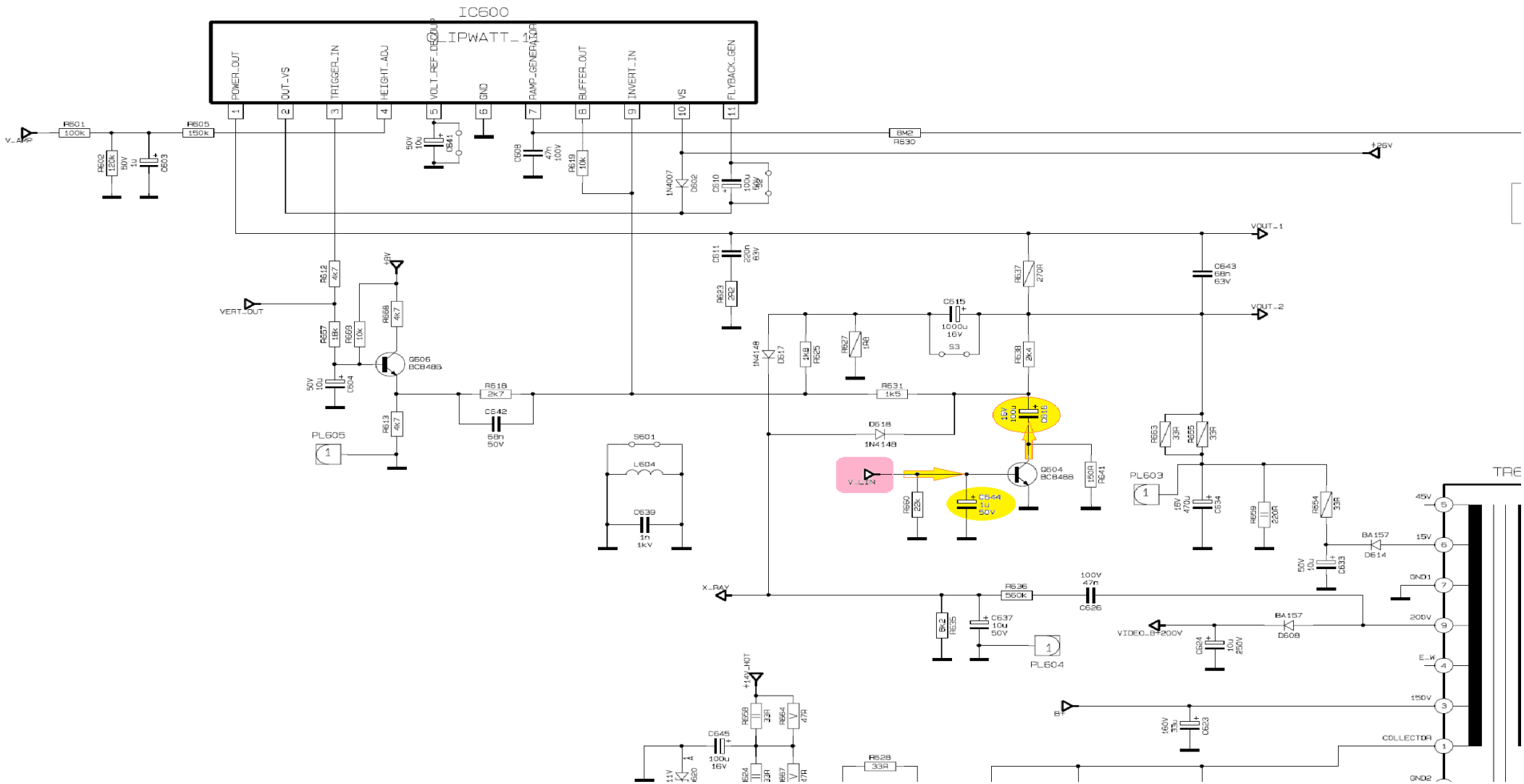
IC600
TDA4863_IPWATT_1
POWER_OUT
OUT_VS
TRIGGER_IN
HEIGHT_ADJ
VOLT_REF_DECOUP
GND
RAMP_GENERATOR
BUFFER_OUT
INVERT_IN
VS
FLYBACK_GEN
V_AMP
R601 100k
R605 150k
R602 120k
C603
C641
C608
R619 10k
1N4007 D602
C610
R630
+25V
VOUT_1
VOUT_2
C611 220n 63V
R623 242
R612 4k7
VERT_OUT
R657 18k
R669 10k
R668 4k7
Q606 BC848B
C604
R613 4k7
PL605
R618 2k7
C642 68n 50V
S601
L604
C639 1n 1kV
1N4148 D617
R625 1k8
R627 1R8
C615 1000u 16V
S3
R637 270R
R638 2k4
C643 68n 63V
R631 1k5
D618 1N4148
C618 15V 100u
V_LIN
Q604 BC848B
C644 50V
R660 22k
R641 150R
R663 33R
R655 33R
PL603
C634 15V 470u
R659 220R
R654 33R
BA157 D614
C633 50V 10u
X_RAY
R636 560k
100V 47n C626
R635 8k2
C637 10u 50V
PL604
VIDEO_B+200V
C624 10u 250V
BA157 D608
B+
C623 160V 33u
+14V_HOT
R658 33R
R664 47R
C645 100u 16V
D620 11V
R624 33R
R667 47R
R628 33R
TRE
45V
15V
GND1
200V
E_W
150V
COLLECTOR
GND2