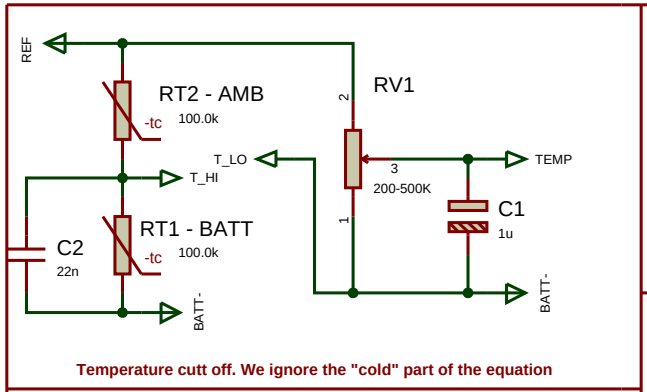

Temperature cutt off. We ignore the "cold" part of the equation

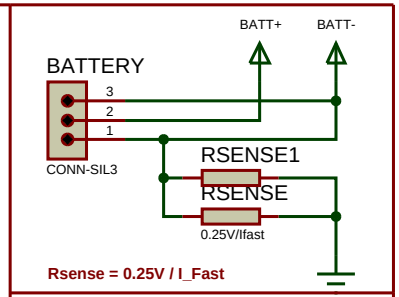

Rsense = 0.25V / I_Fast

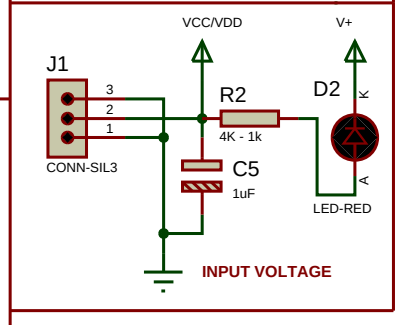

INPUT VOLTAGE

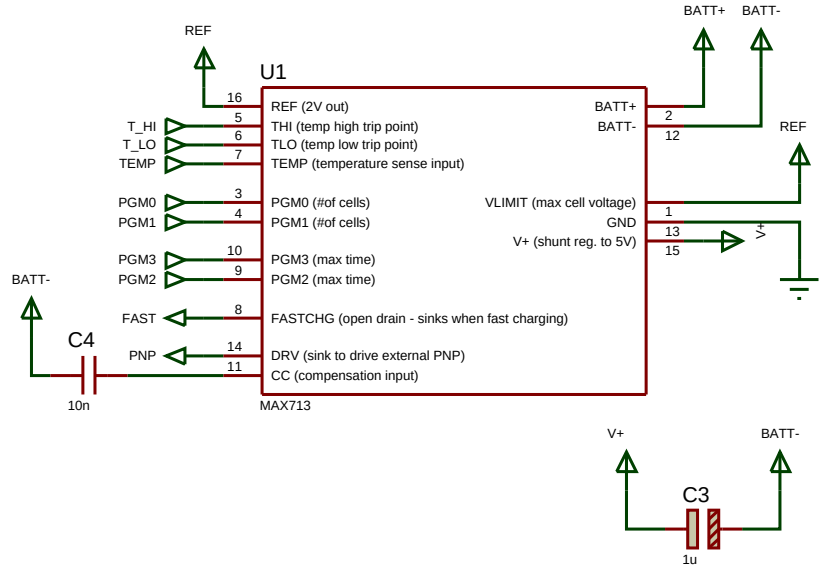

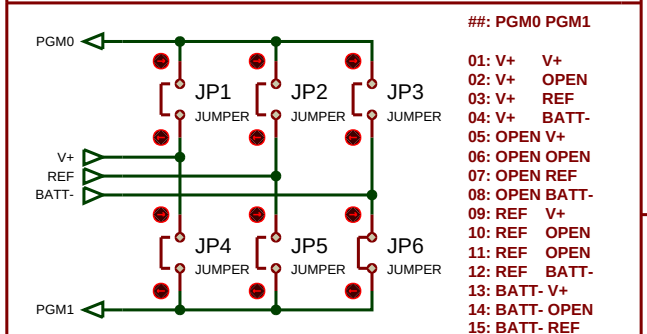

Number of cells to charge

##: PGM0 PGM1

01:	V+	V+
02:	V+	OPEN
03:	V+	REF
04:	V+	BATT-
05:	OPEN	V+
06:	OPEN	OPEN
07:	OPEN	REF
08:	OPEN	BATT-
09:	REF	V+
10:	REF	OPEN
11:	REF	OPEN
12:	REF	BATT-
13:	BATT-	V+
14:	BATT-	OPEN
15:	BATT-	REF
16:	BATT-	BATT-

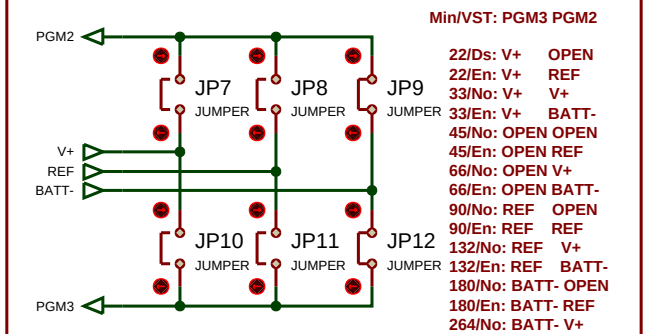

Max Charge Time and Voltage Slope Termination

Min/VST: PGM3 PGM2

22/Ds:	V+	OPEN
22/En:	V+	REF
33/No:	V+	V+
33/En:	V+	BATT-
45/No:	OPEN	OPEN
45/En:	OPEN	REF
66/No:	OPEN	V+
66/En:	OPEN	BATT-
90/No:	REF	OPEN
90/En:	REF	REF
132/No:	REF	V+
132/En:	REF	BATT-
180/No:	BATT-	OPEN
180/En:	BATT-	REF
264/No:	BATT-	V+
264/En:	BATT-	BATT-

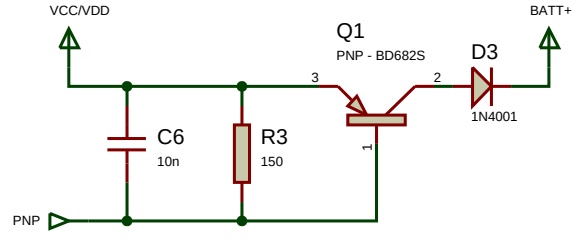

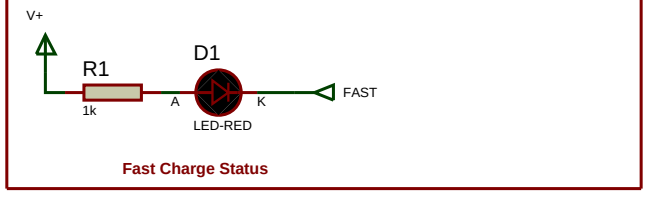

Fast Charge Status