FBX®
SOLO

OPERATING GUIDE

SL-620

SM-620

INSIDE THIS GUIDE:

About the FBX	2,3
Quick-Start Operation	2
FBX-SOLO Controls	4,5
Applications	6-8
Understanding Fixed & Dynamic Filters	9
Operating Instructions	10-12
Troubleshooting Tips	13
Product Specifications	14
Cautions	14
Warranty	15

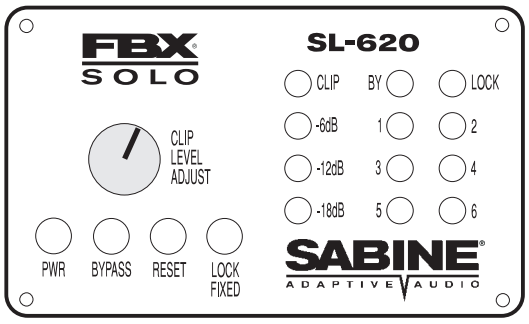

FBX-SOLO Model SL-620

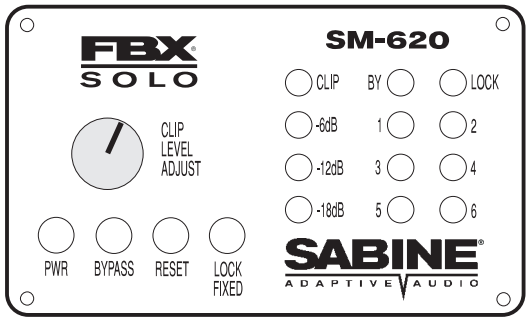

FBX-SOLO Model SM-620

CONGRATULATIONS! You now have the state-of-the-art in feedback control. The Sabine **FBX-SOLO** gives you automatic real-time feedback control for any channel on your mix. In setup **and** during the performance, it gives you more gain and increases the clarity of your mains and monitors. It's the affordable solution to feedback problems, perfect for wireless mics, monitors, acoustic/electric instruments, harmonica mics, multi-mic locations like conference rooms and courthouses -- wherever there's an open microphone.

The FBX-SOLO incorporates the latest in design and digital signal processing technology. It automatically senses feedback in a sound system and determines its pitch. It then places one of its six constant "Q" micro-filters on the resonating frequency and eliminates the feedback in typically less than one second.

Special features of the SL-620 and SM-620:

- The SL-620 has **1/4" in/out connectors** and **input/output level switches** for any combination of ins and outs. The SL is for use with acoustic/electric guitars and guitar amplifiers, mixer insert points, powered mixer patch points and high impedance mics.
- The SM-620, with **selectable phantom power,** has **XLR in/out connectors** for use with balanced microphones.
- Both models offer standard FBX features like **switchable filter widths** and **lockable fixed filters.**

See page 2 for quick-start operating procedures.

FBX and FBX Feedback Exterminator are registered trademarks of Sabine, Inc., and are the brand names of its line of automatic feedback controllers. Covered by U.S. Patent No. 5,245,665, Australian Patent No. 653,736, Canadian Patent No. 2,066,624-2, German Patent No. 69118486.0, and British Patent No. 0486679. Other patents pending. © 1996 Sabine Inc.

SABINE®
ADAPTIVE AUDIO

ABOUT THE FBX...

WORLD'S BEST FEEDBACK CONTROLLER:
Before the invention of the FBX, the most common device for controlling feedback was the 31-band graphic EQ. However, the FBX has three distinct advantages. The most obvious is the FBX functions automatically, even during the program. Another is the FBX micro-filters are precisely placed while EQ filters are fixed. The difference: FBX filters do not have to be as deep, so there is more system gain. The most important advantage is that FBX micro-filters are ten times narrower than 31-band EQ filters. FBX micro-filters return up to 90 percent of the power removed by EQ filters.

Over the years, engineers stopped using 12-band EQs in favor of the narrower-filter 31-band EQ for controlling feedback. The FBX represents the next step. An EQ would need more than 10,000 sliders to be equivalent to your FBX. With the SOLO, your monitors will finally sound loud enough, everyone in the audience will understand each word, and the mains will sound natural and transparent.

WHO NEEDS THE FBX?
Virtually every sound system will be improved with the FBX. Small bands that do not have sound technicians can now increase their monitor volumes so they can hear themselves clearly and with full fidelity, without worrying if the program is going to be ruined by feedback.

Auditoriums and churches of all sizes will enjoy reliable feedback control. Hotels and conference centers around the world can offer meeting rooms with sound systems that won't howl during programs. The SOLO can be installed in theaters, schools, sports arenas, courtrooms -- anywhere multiple microphones are used. It can also be used for teleconferencing, intercoms or interactive remote classrooms.

WHY THE FBX?
The simple beauty of the FBX is its ability to quickly and effectively eliminate feedback with narrower filters than ever before possible. The FBX delivers superior sound quality automatically.

QUICK-START OPERATION

For best results, read all operating instructions before using the FBX-SOLO. If you're already familiar with the FBX or just want a basic overview of FBX operation, this simple quick-start procedure is for you. More detailed instructions begin on page 9 inside this operating guide.

1. Patch in the SOLO where appropriate for your model, and select the input/output level on the back.
2. With gain down on the input channel, put the SOLO in ACTIVE mode (green bypass LED), then slowly raise the channel gain to the point of feedback.
3. Raise the gain slowly until 5 FBX filters are set, then reduce gain slightly.
4. Adjust the CLIP LEVEL on the SOLO, and you're ready to go.

READ THE ENTIRE OPERATING GUIDE FOR COMPLETE INSTRUCTIONS.

A DIRECT HIT ON FEEDBACK! The FBX-SOLO targets feedback without taking a big chunk out of your sound. Tests prove that a single 1/3-octave EQ slider pulled down 12 dB removes almost half the power going to the speakers over a two-octave range. And, as the illustration at right shows, you can't place a graphic EQ filter precisely on the ringing frequency. When you pull down multiple sliders in a normal setup (below), you end up with giant holes in your sound. On the other hand, FBX constant "Q" micro-filters are 10 times narrower - you get back up to 90% of the power you lose with a graphic EQ! That means more gain before feedback and no loss in sound quality.

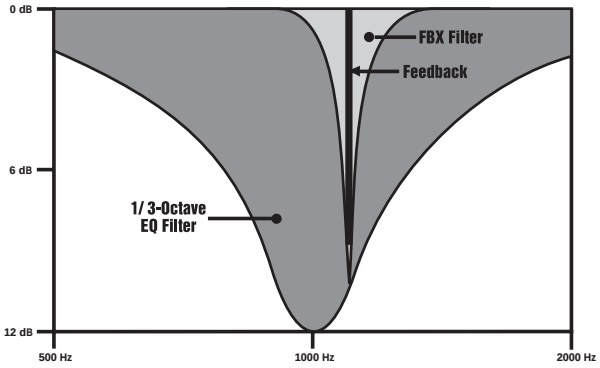

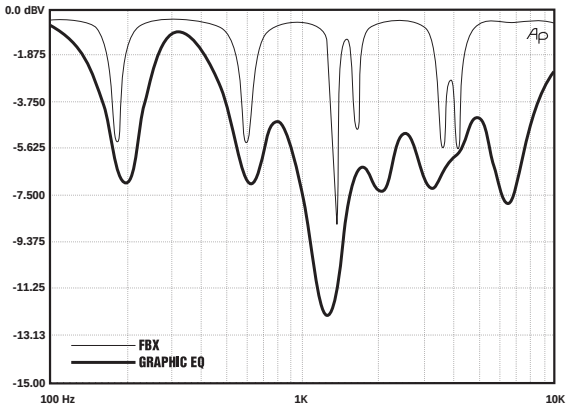

FREQUENCY RESPONSE:
Full Set-Up FBX vs. 1/3-Octave Graphic Equalizer. Test procedure: A PA system was set up using a microphone, mixer, FBX, power amp and two speakers. The system's gain was raised until the FBX removed six feedback points. Next, the FBX was replaced with a 1/3-octave graphic EQ. The EQ was adjusted while the input was raised to the same level achieved with the FBX. The frequency response curves of each device were then plotted.

What this means to you: Doubling the cost of your microphones, speakers and power amp probably would not improve your system's frequency response as much as replacing your EQ with an FBX **for chasing feedback.**

HOW CAN THE SOLO BE USED?

Assign a SOLO to any specific mixer channel. You can also use the SM-620 to connect a phantom-powered mic to a non-phantom-powered mixer.

APPLICATION	SL-620 (Connected to insert point/instrument)	SM-620 (Connected to mic)
SOUND REINFORCEMENT •Individual vocal microphones in mains and monitors	✓	✓
ACOUSTIC GUITARS •Miked •With pickups	✓ ✓	
INSTALLATIONS •Churches •Schools •Theatres •Hotels •Conference rooms •Sports arenas •Courtrooms •Anywhere multiple wireless microphones are used	✓ ✓ ✓ ✓ ✓ ✓ ✓ ✓	✓ ✓ ✓ ✓ ✓ ✓ ✓ ✓
TELECONFERENCING	✓	✓
INTERCOMS	✓	✓
INTERACTIVE REMOTE CLASSROOMS	✓	✓

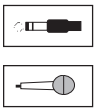

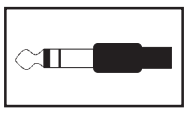

Look for this symbol for specific information on the SL-620.

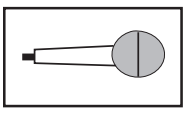

Look for this symbol for specific information on the SM-620.

SL-620 Front & Back Panels

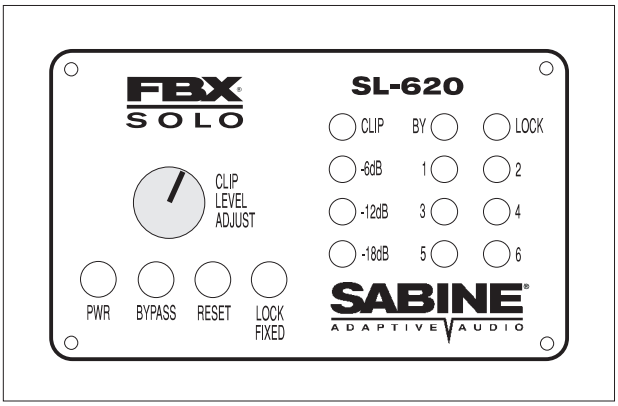

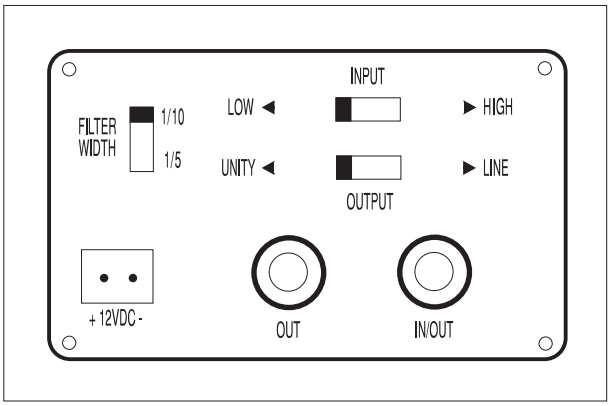

POWER
The ON/OFF power switch is a two-position push button switch. The LEDs corresponding to all active filters will blink on power-up.

ACTIVE/BYPASS
In Active mode, the unit controls feedback automatically. The two-color "BY" LED lights green when the unit is in Active mode and lights red when in Bypass mode. The mic preamp remains active in Bypass mode; only the FBX function is bypassed.

RESET
Press until the LEDs stop flashing to reset or clear all filters.

LOCK FIXED FILTERS
When the "LOCK FIXED" button is pressed, its LED will light to indicate that the FBX is in "LOCK FIXED" mode. "LOCK FIXED" mode can be activated at any time after system setup and will stay on until the button is pressed again and the LED turns off. The dynamic filters are not affected.

FILTER ACTIVITY
When one of the unit's constant "Q" filters is activated, the corresponding LED lights. A blinking LED indicates the filter that was most recently activated.

CLIP LEVEL ADJUST
Adjust the clip level so that the clip LED blinks intermittently. Higher levels will cause distortion, and lower levels will cause an increase in sound system noise level. When the output level switch is set to UNITY: The FBX combines input and output levels into one control so there is no net gain or loss of signal regardless of where the clip level is set. When the output level switch is set to LINE: The FBX has an adjustable gain which ranges from 0dB to +35dB.

FILTER WIDTH SWITCH
Switch to narrow 1/10-octave filters for music applications or to wider 1/5-octave filters for spoken word applications. The change takes effect only on power up. Selecting a new width has no effect unless you power down and then power up again.

INPUT LOW/HIGH SWITCH
Switch to LOW for instrument or microphone in (use with low level inputs such as piezo mics); this provides a 30dB boost in the FBX's input gain structure. Switch to HIGH for insert or line in (use with high level output instruments and signal processors).

OUTPUT UNITY/LINE SWITCH
Switch to UNITY (for level in=level out) for use with amplifiers that accept low level signals, such as guitar amps. In the UNITY setting the SL-620 has a system gain of 1 (input=output level). Switch to LINE (for line level out) if your signal needs preamping. In the LINE setting the gain is adjusted between 0 and +35dB (HIGH IN; +30 to +65dB LOW IN) via the clip level adjust.

12VDC ADAPTOR
The FBX external power supply (single unit power supply; model #S-PSU1) is included with the unit. Use of any other power supplies may cause permanent damage to the unit and **WILL VOID THE WARRANTY.**

INPUTS & OUTPUTS
The connector labeled IN/OUT serves as both the unit's input (tip) **and** output (ring) when used with a single TRS plug. When used with a Y-cord, use the IN/OUT as the input and the OUTPUT as the output.

SM-620 Front & Back Panels

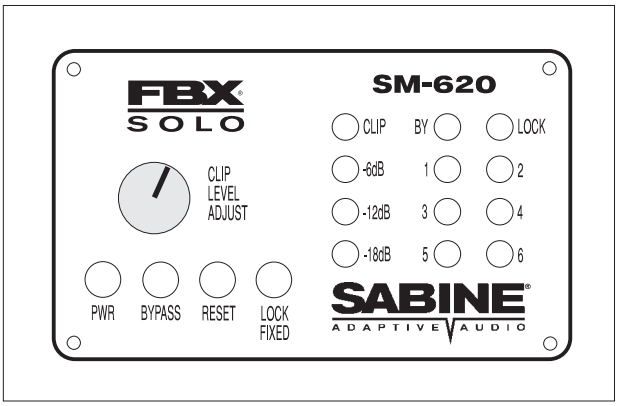

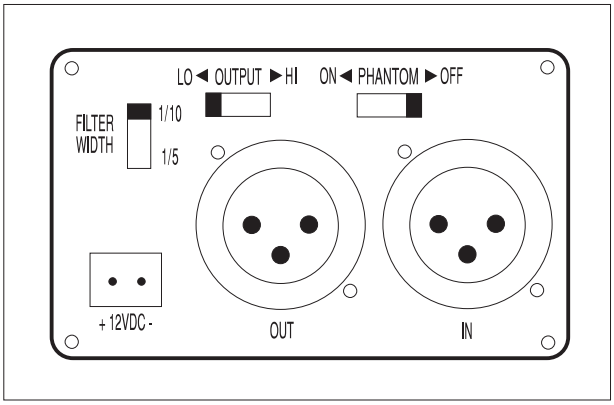

POWER
The ON/OFF power switch is a two-position push button switch. The LEDs corresponding to all active filters will blink on power-up.

ACTIVE/BYPASS
In Active mode, the unit controls feedback automatically. The two-color "BY" LED lights green when the unit is in Active mode and lights red when in Bypass mode. Phantom power and the mic preamp remain active in Bypass mode; only the FBX function is bypassed.

RESET
Press until the LEDs stop flashing to reset or clear all filters.

FILTER ACTIVITY
When one of the unit's constant "Q" filters is activated, the corresponding LED lights. A blinking LED indicates the filter that was most recently activated.

LOCK FIXED FILTERS
When the "LOCK FIXED" button is pressed, its LED will light to indicate that the FBX is in "LOCK FIXED" mode. "LOCK FIXED" mode can be activated at any time after system setup and will stay on until the button is pressed again and the LED turns off. The dynamic filters are not affected.

CLIP LEVEL ADJUST
Adjust the clip level so that the clip LED blinks intermittently. Higher levels will cause distortion, and lower levels will cause an increase in sound system noise level. When the output level switch is set to UNITY: The FBX combines input and output levels into one control so there is no net gain or loss of signal regardless of where the clip level is set. When the output level switch is set to LINE: The FBX has an adjustable gain which ranges from -15dB to +20dB.

FILTER WIDTH SWITCH
Switch to narrow 1/10-octave filters for music applications or to wider 1/5-octave filters for spoken word applications. The change takes effect only on power up. Selecting a new width has no effect unless you power down and then power up again.

OUTPUT LO/HI SWITCH
In the LO setting, the SM-620 has unity gain (input=output); use LO for mic level. In the HI setting, gain is adjustable between -15dB and +20dB using the clip level adjust; use HI for line level, or when you need to preamp the signal.

PHANTOM POWER ON/OFF SWITCH
The SM-620 is set to "PHANTOM POWER - OFF" at the factory. If you wish to use phantom power, move the switch to "ON."

12VDC ADAPTOR
The FBX external power supply (single unit power supply; model #S-PSU1) is included with the unit. Use of any other power supplies may cause permanent damage to the unit and **WILL VOID THE WARRANTY.**

INPUT
The input accepts balanced XLR-3 (PIN 2 high) plugs.

OUTPUT
Use balanced XLR-3 plugs (PIN 2 high) for balanced mixer line inputs.

APPLICATIONS

SL-620: You can use the SL-620 with acoustic/electric guitars and guitar amplifiers, mixer insert points, powered mixer patch points and high impedance mics. Note: In each of these drawings, the output level could be set to line or unity depending on your situation. **Use the following wiring diagrams (presented in order of most common to least common setup) as guides for setup:**

MIXER Input Channel (typical)

SL-620, Configuration 1

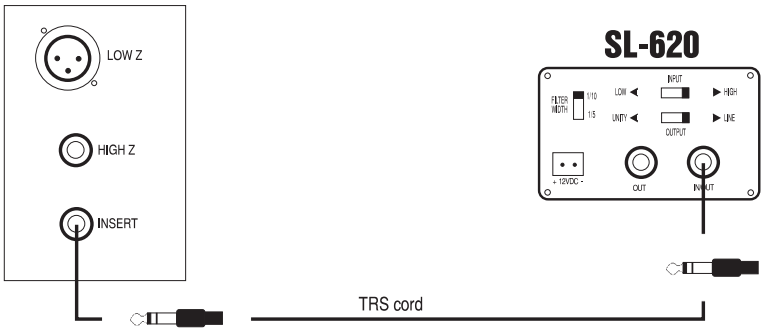

MIXER Input Channel (typical)

SL-620, Configuration 2

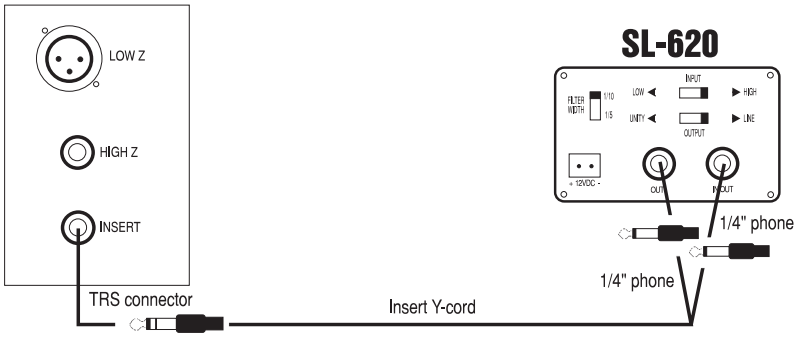

MIXER Input Channel (typical)

SL-620, Configuration 3

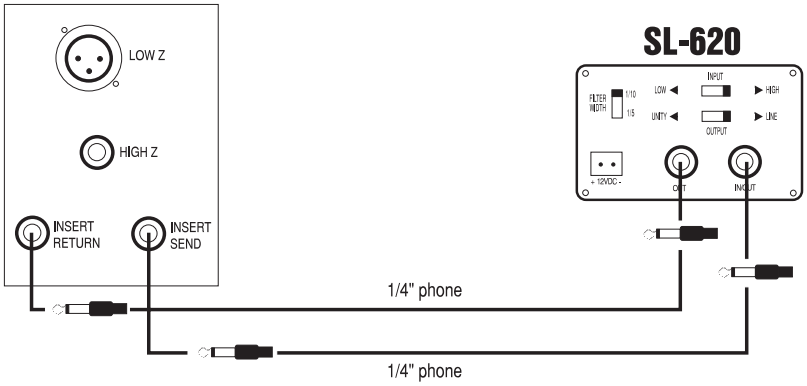

MIXER Input Channel (typical)

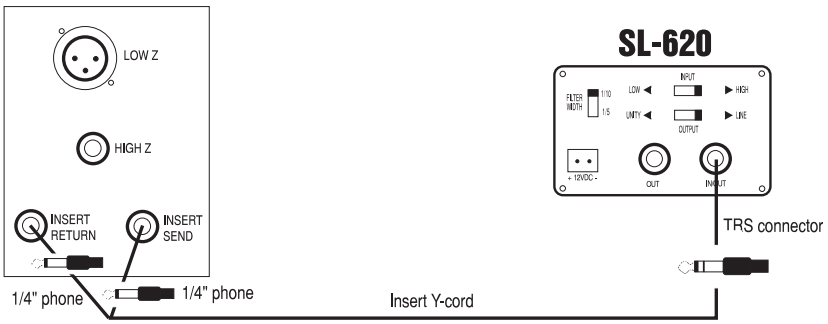

SL-620, Configuration 4

MIXER Input Channel (typical)

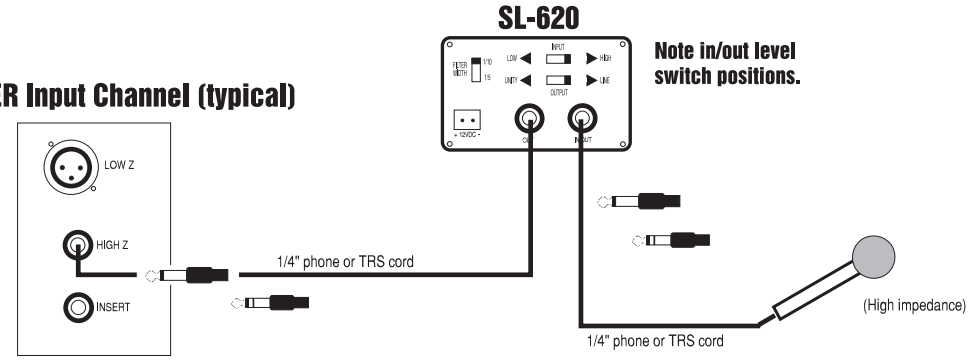

You may also use this setup with a guitar. Choose appropriate level for your situation.

SL-620, Configuration 5

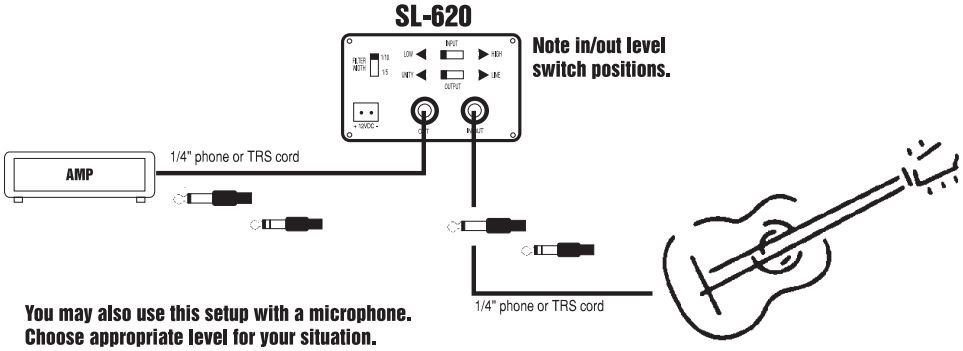

You may also use this setup with a microphone. Choose appropriate level for your situation.

SL-620, Configuration 6

SM-620: Use the SM-620 with balanced microphones.

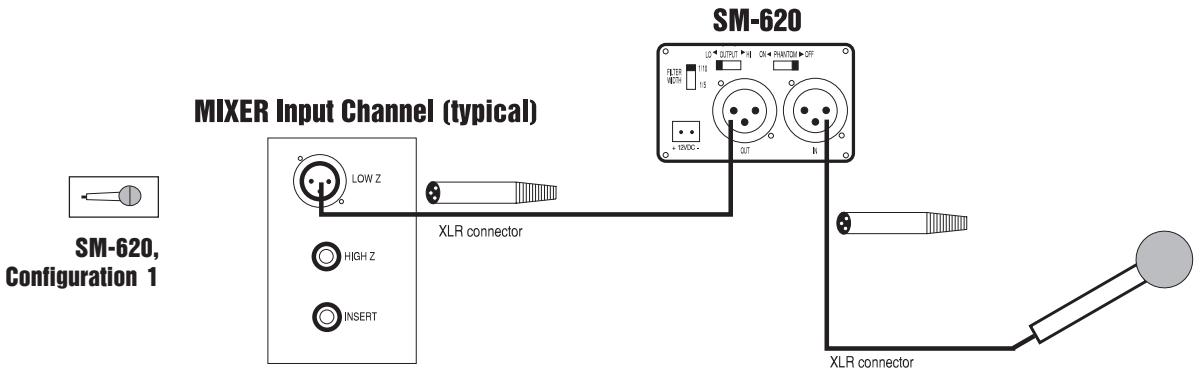

SM-620, Configuration 1

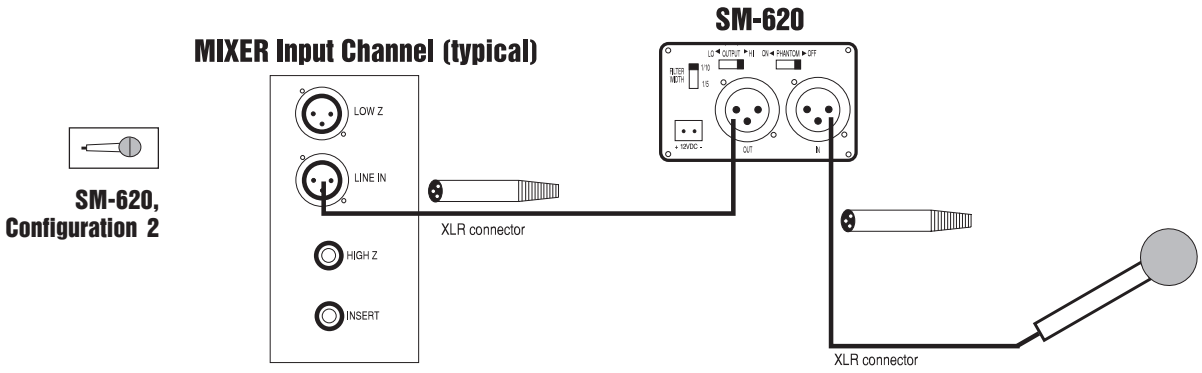

SM-620, Configuration 2

BEFORE YOU BEGIN

The FBX automatic feedback controller improves any sound reinforcement system. By following these simple instructions, you will be assured of the most benefit from your FBX and sound system. The instructions presume that you are familiar with the fundamentals of sound reinforcement. If any of the terms are not clear, or if the system does not perform as expected, contact your local Sabine dealer for further information. Read on for a basic explanation of FBX features you should understand before using your FBX.

POWERING UP

When connecting the power supply to the FBX-SOLO, angle the connector down, then push the connector up into the input **gently,** with the lip facing **up** as shown. Do not force the connector into or out of the FBX.

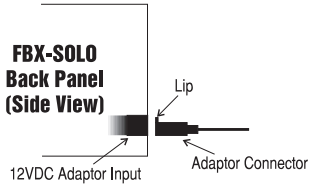

UNDERSTANDING FIXED & DYNAMIC FILTERS

The FBX has two types of constant "Q" filters: FIXED and DYNAMIC. Both filters are placed the same way: Feedback is detected, and the filter is placed just deep enough to eliminate it. The difference comes after the filter is placed. FIXED FILTERS are set automatically during the initial setup and remain on the initially detected feedback tone -- they do not move. The system's gain before feedback is provided by the FIXED FILTERS; i.e., increasing the number of FIXED FILTERS increases the system's gain before feedback. The FBX's DYNAMIC FILTERS control intermittent feedback that occurs during the program; they can release and move to new feedback frequencies and are for adaptive feedback control during the performance. **For many applications, the optimal setting is the one which gives maximum gain - i.e., four FIXED and two DYNAMIC filters (default setting). However, in some applications, such as use of wireless microphones, mobility is more important than maximum gain. In this case, you may wish to have more dynamic than fixed filters. Any combination is possible.**

The filters can be reconfigured easily from the factory default setting (four fixed and two dynamic) to any combination of fixed and dynamic filters. For example, the following procedure will set three filters fixed and three dynamic:

1. Place the unit in BYPASS mode.
2. Power down the SOLO.
3. While depressing the RESET button, power up the unit.
4. Release the RESET button. The FILTER INDICATOR LEDs will now light in sequence.
5. When the third LED is lit, press the RESET button.
6. Notice that the first three LEDs flash three times to verify that they are now the fixed filters.

Note: The fixed filters flash three times whenever the FBX is powered up.

INSTRUCTIONS FOR OPERATION

SL-620 SYSTEM INITIALIZING PROCEDURE

Choose the input level. Switch to LOW for instrument or microphone in (use with low level inputs such as piezo mics); this provides a 30dB boost in the FBX's input gain structure. Switch to HIGH for insert or line in (use with high level output instruments and signal processors).

Choose the output level. Switch to UNITY (for level in=level out) for use with amplifiers that accept low level signals, such as guitar amps. In the UNITY setting the SL-620 has a system gain of 1 (input=output level). Switch to LINE (for line level out) if your signal needs preamping. In the LINE setting the gain is adjusted between 0 and +35dB via the clip level adjust.

Follow these steps to obtain the maximum gain before feedback without changing the tonal quality of your program. Set up only one SOLO at a time. The following instructions are for using the SOLO on the mains. For use with monitors, substitute monitor send and master monitor control for input channel level fader and mixer master output. Be sure to turn off the mains when initializing the SOLO in your monitor system.

1. Place the speakers and microphones in the positions where they will be used during the program. Avoid placing microphones directly in front of speakers.
2. Set the mixer master output, all channel level faders, and the monitors to minimum.
3. Turn on the SOLO.
4. Turn on the mixer, any signal processing equipment, and finally the power amp. Press the SOLO's RESET button until the LEDs stop flashing to clear out filters set previously.
5. If you are using a graphic EQ, adjust it only for the desired tonal qualities. DO NOT NOTCH FOR FEEDBACK.
6. Be sure the SL-620 is in active mode. The "BY" LED will light green to indicate the SL-620 is active and red if it is in bypass mode.
7. Turn the SOLO's clip level adjust to the two o'clock position.
8. Set the mixer master output to a nominal level, and lower all channel levels to minimum.
9. **Slowly** raise the input channel level fader for the channel being set until feedback occurs. The SL-620 should quickly remove the feedback. The first FILTER LED will then blink to indicate a filter has been set.
10. Keep raising the level slowly until all FIXED FILTERS and one dynamic filter is set. Any uninitialized dynamic filters will be set later if feedback occurs during the program.
11. Now lower the channel level fader slightly so that the system is not on the verge of another feedback point. This is the maximum volume level that the SL-620 will be able to provide. Higher levels will cause uncontrollable feedback.
12. Finally, during sound check, adjust the CLIP LEVEL ADJUST so that the red CLIP LED blinks intermittently, as you would adjust the recording level of a tape recorder. The unit will clip and distort the program if the CLIP LEVEL ADJUST is set too high. If it is set too low, the signal-to-noise ratio will degrade and the system may hiss. The best adjustment occurs when the clip levels of the SOLO and the final power amp are matched (when the clip level indicators blink at the same time).

MIXER Input Channel (typical)

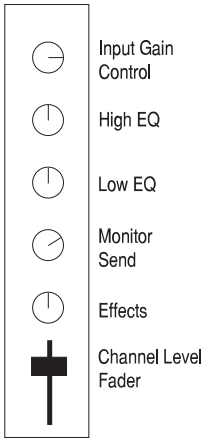

SM-620 SYSTEM INITIALIZING PROCEDURE

Choose the output level. In the LO setting, the SM-620 has unity gain (input=output); use LO for mic level. In the HI setting, gain is adjustable between -15dB and +20dB using the clip level adjust; use HI for line level, or when you need to preamp the signal.

Select Phantom Power ON/OFF. Your SM is delivered from the factory with the phantom power function disabled. If you wish to use phantom power, you may enable the function by switching to "PHANTOM POWER - ON" on the back panel. *The majority of low impedance **balanced** non-phantom-powered mics are wired to ignore phantom power. Check your microphone owner's manual for verification to avoid damage.*

To initialize the SM-620:

Follow these steps to obtain the maximum gain before feedback without changing the tonal quality of your program. Set up only one SOLO at a time. The following instructions are for using the SOLO on the mains. For use with monitors, substitute monitor send and master monitor control for input channel level fader and mixer master output. Be sure to turn off the mains when initializing the SOLO in your monitor system.

1. Place the speakers and microphones in the positions where they will be used during the program. Avoid placing microphones directly in front of speakers.
2. Set the mixer master output, all channel level faders, and the monitors to minimum.
3. Turn on the SOLO.
4. Turn on the mixer, any signal processing equipment, and finally the power amp. Press the SOLO's RESET button until the LEDs stop flashing to clear out filters set previously.
5. If you are using a graphic EQ, adjust it only for the desired tonal qualities. DO NOT NOTCH FOR FEEDBACK.
6. Be sure the SM-620 is in active mode. The "BY" LED will light green to indicate the SOLO is in active mode and red if it is in bypass mode.
7. Turn the SOLO's clip level adjust to the two o'clock position.
8. Set the mixer master output to a nominal level, and lower all channel levels to minimum.
9. **Slowly** raise the channel level fader for the channel being set until feedback occurs. The SM should quickly remove the feedback. The first FILTER LED will then blink to indicate a filter has been set.
10. Keep raising the channel level fader slowly until all FIXED FILTERS and one dynamic filter is set. Any uninitialized dynamic filters will be set later if feedback occurs during the program.
11. Now lower the channel level fader slightly so that the system is not on the verge of another feedback point. This is the maximum volume level the SM will be able to provide. Higher levels will cause uncontrollable feedback.
12. Finally, during sound check, adjust the CLIP LEVEL ADJUST so that the red CLIP LED blinks intermittently, as you would adjust the recording level of a tape recorder. The unit will clip and distort the program if the CLIP LEVEL ADJUST is set too high. If it is set too low, the signal-to-noise ratio will degrade and the system may hiss. The best adjustment occurs when the clip levels of the SOLO and the final power amp are matched (when the clip level indicators blink at the same time).

HOW TO USE THE "LOCK FIXED" FEATURE

In certain situations the FBX may mistake music for feedback and drive the fixed filters deeper than necessary, like in a church with a pipe organ or during a performance with a great deal of intentional sustained electric guitar feedback. You may prevent the **fixed** filters from deepening beyond their initial depth by pressing the "LOCK FIXED" button on the front panel AFTER setting the fixed filters as described previously. The "LOCK FIXED" LED will light to indicate that the FBX is in "LOCK FIXED" mode. The fixed filters will stay locked until you press the "LOCK FIXED" button again. The dynamic filters are not affected. **In almost every situation, it is best to lock the fixed filters right after the initial setup.**

LIMITING THE TOTAL NUMBER OF ACTIVE FILTERS

You may choose to limit the total number of active filters for each application by using the "LOCK FIXED" button. For example, if you wish to use only three fixed and one dynamic filter, set the FBX so there are five fixed and one dynamic filter. Then during the setup procedure, simply press the "LOCK FIXED" button after setting the first three fixed filters. The remaining two fixed filters will be locked in their zero position.

SELECTING FILTER WIDTH

If the SOLO is to be used for a music application, 1/10-octave filters are most effective. However, in spoken word applications, such as lectures or teleconferencing, the wider 1/5-

octave filters are recommended. Select the filter width using the switch on the SOLO back panel. The change takes effect only on power-up. Selecting a new width has no effect unless you power down and then power up again.

ENGAGING THE NOISE GATE

One outstanding feature of your FBX-SOLO is a user-selectable noise gate. It acts as an automatic switch that opens a microphone only when someone is speaking directly into it. A noise gate is especially useful in systems that have a number of open microphones, such as courtrooms, conference rooms, or parliament buildings. Gating microphones greatly reduces the number of possible feedback points in the room and allows for more system gain.

The level that turns the noise gate on and off is called the threshold. If the level coming into the gate is greater than the threshold, the noise gate opens, and the mic is turned on. If it is less than the threshold, the noise gate closes, and the mic is turned off.

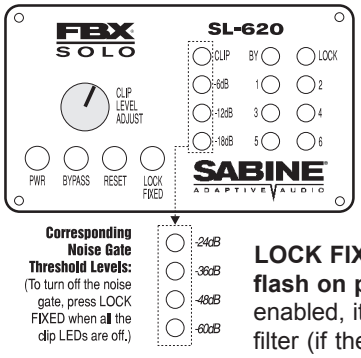

Corresponding Noise Gate Threshold Levels: (To turn off the noise gate, press LOCK FIXED when all the clip LEDs are off.)

You can adjust your SOLO to four different threshold levels (see diagram at left), or turn it off. To select the threshold, power down the SOLO. Hold in the LOCK FIXED button, and power up the SOLO. The clip level LEDs will light in sequence. Select the threshold level by pressing the LOCK FIXED button again when the clip LED lights at the corresponding threshold level. The noise gate is now enabled, indicated by a flashing level LED on power-up. **Pressing the LOCK FIXED button with no clip LEDs lighted turns off the noise gate. If no lights flash on power-up, the noise gate is not engaged.** When the SOLO's noise gate is enabled, it will not become engaged until **after** you've set all fixed filters and one dynamic filter (if the SOLO is configured for any).

USING SABINE'S OPTIONAL SOLO ACCESSORIES

1-U rack tray (model #SL6RACK): An optional 1-U rack tray holds up to six SOLOs. Mount the SL-620s, SM-620s, or a combination of both side by side on the tray. **Use only Sabine supplied screws; use of any other screws may damage the SOLO and void the warranty.**

IMPORTANT OPERATING CONSIDERATIONS

MEMORY:

The FBX stores the positions and depths of the filters in nonvolatile internal memory when the unit is turned off or during a power failure. The unit will return all filters to their previous frequencies and depths when it is turned back on.

BYPASS MODE:

Placing the FBX-SOLO in bypass mode only shuts down the FBX function; the microphone preamp still functions when the unit is in bypass mode. The SOLO will not pass signal if the power is off in either active or bypass mode.

RESETTING THE FILTERS:

The user must reset the FBX if the microphones or speakers are moved significantly. To reset the unit, press RESET until the LEDs stop flashing.

TROUBLESHOOTING TIPS

Q. Can I patch the SOLO SL-620 after the mixer and before the power amp, just like other FBX models?
A. Yes, but only in cases where just six feedback filters are needed, such as on the monitors alone. Six FBX filters may not provide enough gain before feedback for your entire mix.

Q. Sometimes I don't get enough gain before feedback. Why?
A. Gain before feedback is determined by the number of fixed filters you set; increasing the number of fixed filters during setup increases the system's gain before feedback. Fixed filters are set automatically during the initial setup and remain on the initially detected feedback tone -- they do not move. You can reconfigure the filters from the factory default setting (four fixed and two dynamic) to any combination of fixed and dynamic filters. Review the procedure on page 9 ("UNDERSTANDING FIXED AND DYNAMIC FILTERS") of this operating guide.

Q. The CLIP LEVEL LEDs do not light. The unit will not catch feedback. Why?
A. The unit is not in the signal path. Check the connections.

Q. Why does one of the FILTER ACTIVITY LEDs blink?
A. The last filter to be automatically updated blinks. During normal operation, the blinking will move from filter to filter as the SOLO finds new feedback points. This gives the user a visual confirmation that the unit is functioning properly.

Q. Why would the FBX cause a noticeable hum?
A. It may hum if the system is improperly grounded. Check for bad grounds.

Q. Why does my system sound thin and muffled?
A. Place the SOLO in BYPASS MODE. If the system still sounds thin, your problem is probably with improper use of a graphic EQ. If the problem exists only with the SOLO in ACTIVE mode, verify the clip level setting, reinitialize the system and lock the fixed filters.

Q. With the SL-620 in the insert point, I hear no audio. Why?
A. Your insert point may be wired opposite to the SOLO. Try reversing the tip and ring (in and out) of your Y-cord. If you are using a single TRS cable, you will have to reconfigure one end of it to conform to your mixer insert point.

Q. Will the SOLO eliminate feedback in both mains and monitors?
A. Yes, but for maximum gain you should set as many fixed filters as possible on the system with the most feedback problems. Choose which system is more likely to have feedback, and follow the system initializing procedure for either mains or monitors. During program, the dynamic filters will control feedback for both mains and monitors if they are in use, but only on the input channel the SOLO is patched into.

Q. The channel I have the SOLO in seems noisy. What can I do?
A. If the noise floor is too high, you need to readjust the gain structure of that channel. Follow the SOLO initialization instructions in this guide.

ENGINEERING SPECIFICATIONS

FILTERS
Six independent digital notch filters controlled automatically from 51Hz to 17,000Hz
Filter width: 1/10 octave, typical, or 1/5-oct. selectable; constant "Q"
Filter depth: DSP controlled, variable to -50dB
Resolution: 1Hz from 51Hz to 17KHz
Time required to find and eliminate feedback: 0.4 seconds, typical @ 1KHz
Total number of combined filters active: User selectable, from 1 to 6
Number of Dynamic vs. Fixed filters: User selectable
Last configuration stored in memory

INPUT/OUTPUT - SL-620 ONLY
I/O Connectors: 1/4" TRS; tip=input, ring=output, sleeve=ground
Input Impedance: Unbalanced >1 meg Ohm
Output Impedance: Unbalanced 10 Ohms nominal; Maximum load 2K Ohms
Maximum Input/Output Level at lowest gain: +20 dBV
Gain Range (with line out selected): 0 to +35 dB (high in), +30 to +65 dB (low in)
Input to Output Gain unity setting: +/- 0.5 dBV
Bypass: Digital

INPUT/OUTPUT - SM-620 ONLY
I/O Connectors: XLR-3 PIN 2 high Balanced
Input Impedance: 1K Ohm nominal
Output Impedance: Unbalanced 10 Ohms nominal; Maximum load 2K Ohms
Maximum Input/Output Level at lowest gain: -10 dBV**
Gain Range: -15 to +20dB (at high output)
Input to Output Gain unity setting: +/- 0.5 dBV
Bypass: Digital
EIN: -105dBm @ 150 Ohms, 20Hz-17KHz or better
Phantom Power: 48V switch selectable

PERFORMANCE***
Frequency Response: < +0.75dB, 20Hz to 17,000Hz
Signal to Noise Ratio: >87dB typical
Total Harmonic Distortion: <0.02% @ 1KHz @ any gain setting
Dynamic Range: >92dB

NOISE GATE
Attack Time: Fixed (400mS)
Threshold: Selectable (-24dB, -36dB, -48dB, -60dB)

POWER SUPPLY
8-20VDC @ 400 mA

MEMORY BATTERY LIFE
7 years, typical

DIMENSIONS
1-U height, 1/6-RU width; 2.78 x 1.65 x 5.5 in. (6.95 x 4.13 x 13.75 cm)

WEIGHT
9 oz. (0.26 kg)

OPTIONS
SL6RACK Rack Tray (holds up to six units)

*Below approximately 200Hz the feedback filters become slightly wider to increase the feedback and rumble capture speed at these low frequencies.
**Note: Inputs may be balanced or unbalanced.
***Tests performed using an Audio Precision System One model 322 or equal.

SPECIFICATIONS SUBJECT TO CHANGE WITHOUT NOTICE.

CAUTION:

EXPOSURE TO EXTREMELY HIGH NOISE LEVELS MAY CAUSE A PERMANENT HEARING LOSS. INDIVIDUALS VARY CONSIDERABLY IN SUSCEPTIBILITY TO NOISE INDUCED HEARING LOSS, BUT NEARLY EVERYONE WILL LOSE SOME HEARING IF EXPOSED TO SUFFICIENTLY INTENSE NOISE FOR A SUFFICIENT TIME. THE U.S. GOVERNMENT'S OCCUPATIONAL SAFETY AND HEALTH ADMINISTRATION (OSHA) HAS SPECIFIED THE FOLLOWING PERMISSIBLE NOISE LEVEL EXPOSURES:

DURATION/DAY IN HOURS	SOUND LEVEL IN dBA, SLOW RESPONSE
8	90
6	92
4	95
3	97
2	100
1-1/2	102
1	105
1/2	110
1/4 or less	115

ACCORDING TO OSHA, ANY EXPOSURE IN EXCESS OF THE ABOVE PERMISSIBLE LIMITS COULD RESULT IN HEARING LOSS. EAR PLUGS OR PROTECTORS IN THE EAR CANALS OR OVER THE EARS MUST BE WORN WHEN OPERATING THIS DEVICE IN ORDER TO PREVENT A PERMANENT HEARING LOSS. IF EXPOSURE IS IN EXCESS OF THE LIMITS AS SET FORTH ABOVE, TO ENSURE AGAINST POTENTIALLY DANGEROUS EXPOSURE TO HIGH SOUND PRESSURE LEVELS, IT IS RECOMMENDED THAT ALL PERSONS EXPOSED TO EQUIPMENT CAPABLE OF PRODUCING HIGH SOUND PRESSURE LEVELS SUCH AS THIS DEVICE BE PROTECTED BY HEARING PROTECTORS WHILE THIS UNIT IS IN OPERATION.

1. Read all safety and operating instructions before using this product.
2. All safety and operating instructions should be retained for future reference.
3. Obey all cautions in the operating instructions and on the unit.
4. All operating instructions should be followed.
5. This product should not be used near water, i.e a bathtub, sink, swimming pool, wet basement, etc.
6. This product should be located so that its position does not interfere with its proper ventilation. It should not be placed flat against a wall or placed in a built-in enclosure that will impede the flow of cooling air.
7. This product should not be placed near a source of heat such as a stove or radiator.
8. Connect only to a power supply of the type marked on the unit adjacent to the power.
9. Never break off the ground pin on the power supply cord.
10. Power supply cords should always be handled carefully. Never walk or place equipment on power supply cords. Periodically check cords for cuts or signs of stress, especially at the plug and the point where the cord exits the unit.
11. The power supply cord should be unplugged when the unit is to be unused for long periods of time.
12. Care should be taken so that objects do not fall and liquids are not spilled into the unit through the ventilation holes or any other openings.
13. This unit should be checked by a qualified service technician if:
    A. The power supply cord or plug has been damaged.
    B. Anything has fallen or been spilled into the unit.
    C. The unit does not operate correctly.
    D. The unit has been dropped or the enclosure damaged.
14. The user should not attempt to service this equipment. All service work should be done by a qualified service technician.

OSHA 2201; 1995 revised.

ONE-YEAR LIMITED WARRANTY:

THIS LIMITED WARRANTY VALID ONLY WHEN PURCHASED AND REGISTERED IN THE UNITED STATES OR CANADA. ALL EXPORTED PRODUCTS ARE SUBJECT TO WARRANTY AND SERVICES TO BE SPECIFIED AND PROVIDED BY THE AUTHORIZED DISTRIBUTOR FOR EACH COUNTRY.

Ces clauses de garantie ne sont vaiables qu'aux Etats-Unis et au Canada. Dans tous les autres pays, les clauses de garantie et de maintenance sont fixees par le distributeur national et assuree par lui selon la legislation en vigueur.

Diese Garantie ist nur in den USA and Kanada gultig. Alle Export-Produkte sind der Garantie und dem Service des Importeurs des jewelligen Landes untervorfen.

Esta garantia es valida solamente cuando el producto es comprado en E.U. continentales o en Canada. Todos los productos que sean comprados en el extranjero, estan sujetos a las garantias y servicio que cada distribuidor autorizado determine y otrezca en los diterentes paises.

ONE-YEAR LIMITED WARRANTY/REMEDY

SABINE, INC. ("SABINE") warrants this product to be free from defects in material and workmanship for a period of one (1) year from date of purchase PROVIDED, however, that this limited warranty is extended only to the original retail purchaser and is subject to the conditions, exclusions and limitations hereinafter set forth:

CONDITIONS, EXCLUSIONS AND LIMITATIONS OF LIMITED WARRANTIES

These limited warranties shall be void and of no effect if:

a. The first purchase of the product is for the purpose of resale; or

b. The original retail purchase is not made from an AUTHORIZED SABINE DEALER; or

c. The product has been damaged by accident or unreasonable use, neglect, improper service or maintenance, or other causes not arising out of defects in material or workmanship; or

d. The serial number affixed to the product is altered, defaced or removed; or

e. The power supply grounding pin is removed or otherwise defeated. In the event of a defect in material and/or workmanship covered by this limited warranty, Sabine will repair the defect in material or workmanship or replace the product, at Sabine's option; and provided, however, that, in any case, all costs of shipping, if necessary, are paid by you, the purchaser.

THE WARRANTY REGISTRATION CARD SHOULD BE ACCURATELY COMPLETED, MAILED TO AND RECEIVED BY SABINE WITHIN FOURTEEN (14) DAYS FROM THE DATE OF YOUR PURCHASE.

In order to obtain service under these warranties, you must:

a. Bring the defective item to any AUTHORIZED SABINE DEALER and present therewith the ORIGINAL PROOF OF PURCHASE supplied to you by the AUTHORIZED SABINE DEALER in connection with your purchase from him of this product. If the DEALER is unable to provide the necessary warranty service, you will be directed to the nearest other SABINE AUTHORIZED DEALER which can provide such service.

OR

b. Call Sabine for a RETURN AUTHORIZATION NUMBER and ship the defective item, prepaid, to:

SABINE, INC.
13301 HIGHWAY 441
ALACHUA, FL 32615-8544 USA

including therewith a complete, detailed description of the problem, together with a legible copy of the original PROOF OF PURCHASE and a complete return address. Upon Sabine's receipt of these items:

If the defect is remedial under the limited warranties and the other terms and conditions expressed have been complied with, Sabine will provide the necessary warranty service to repair or replace the product and will return it, FREIGHT COLLECT, to you, the purchaser.

Sabine's liability to the purchaser for damages from any cause whatsoever and regardless of the form of action, including negligence, is limited to the actual damages up to the greater of $500.00 or an amount equal to the purchase price of the product that caused the damage or that is the subject of or is directly related to the cause of action. Such purchase price will be that in effect for the specific product when the cause of action arose. This limitation of liability will not apply to claims for personal injury or damage to real property or tangible personal property allegedly caused by Sabine's negligence. Sabine does not assume liability for personal injury or property damage arising out of or caused by a non-Sabine alteration or attachment, nor does Sabine assume any responsibility for damage to interconnected non-Sabine equipment that may result from the normal functioning and maintenance of the Sabine equipment.

UNDER NO CIRCUMSTANCES WILL SABINE BE LIABLE FOR ANY LOST PROFITS, LOST SAVINGS, ANY INCIDENTAL DAMAGES OR ANY CONSEQUENTIAL DAMAGES ARISING OUT OF THE USE OR INABILITY TO USE THE PRODUCT, EVEN IF SABINE HAS BEEN ADVISED OF THE POSSIBILITY OF SUCH DAMAGES.

THESE LIMITED WARRANTIES ARE IN LIEU OF ANY AND ALL WARRANTIES, EXPRESS OR IMPLIED, INCLUDING BUT NOT LIMITED TO, THE IMPLIED WARRANTIES OF MERCHANTABILITY AND FITNESS FOR A PARTICULAR USE; PROVIDED, HOWEVER, THAT IF THE OTHER TERMS AND CONDITIONS NECESSARY TO THE EXISTENCE OF THE EXPRESS LIMITED WARRANTIES, AS HEREINABOVE STATED, HAVE BEEN COMPLIED WITH, IMPLIED WARRANTIES ARE NOT DISCLAIMED DURING THE APPLICABLE ONE-YEAR PERIOD FROM DATE OF PURCHASE OF THIS PRODUCT.

SOME STATES DO NOT ALLOW LIMITATION ON HOW LONG AN IMPLIED WARRANTY LASTS, OR THE EXCLUSION OR LIMITATION OF INCIDENTAL OR CONSEQUENTIAL DAMAGES, SO THE ABOVE LIMITATIONS OR EXCLUSIONS MAY NOT APPLY TO YOU. THESE LIMITED WARRANTIES GIVE YOU SPECIFIC LEGAL RIGHTS, AND YOU MAY ALSO HAVE OTHER RIGHTS WHICH MAY VARY FROM STATE TO STATE.

THESE LIMITED WARRANTIES ARE THE ONLY EXPRESS WARRANTIES ON THIS PRODUCT, AND NO OTHER STATEMENT, REPRESENTATION, WARRANTY OR AGREEMENT BY ANY PERSON SHALL BE VALID OR BINDING UPON SABINE.

In the event of any modification or disclaimer of express or implied warranties, or any limitation of remedies, contained herein conflicts with applicable law, then such modification, disclaimer or limitation, as the case may be, shall be deemed to be modified to the extent necessary to comply with such law.

Your remedies for breach of these warranties are limited to those remedies provided herein, and Sabine gives this limited warranty only with respect to equipment purchased in the United States of America.

INSTRUCTIONS-WARRANTY REGISTRATION CARD

1. Mail the completed WARRANTY REGISTRATION CARD to:

SABINE, INC.
13301 HIGHWAY 441
ALACHUA, FL 32615-8544 USA

a. Keep the PROOF OF PURCHASE. In the event warranty service is required during the warranty period, you will need this document. **There will be no identification card issued by Sabine, Inc.**

2. IMPORTANCE OF WARRANTY REGISTRATION CARDS AND NOTIFICATION OF CHANGES OF ADDRESS:

a. Completion and mailing of WARRANTY REGISTRATION CARDS - Should notification become necessary for any condition that may require correction, the REGISTRATION CARD will help ensure that you are contacted and properly notified.

b. Notice of address changes - If you move from the address shown on the WARRANTY REGISTRATION CARD, you should notify Sabine of the change of address so as to facilitate your receipt of any bulletins or other forms of notification which may become necessary in connection with any condition that may require dissemination of information or correction.

3. You may contact Sabine directly by telephoning (904) 418-2000.

4. Please have the Sabine product name and serial number available when communicating with Sabine Customer Service.

SABINE®
ADAPTIVE AUDIO

MADE IN USA.
Manufactured by: Sabine, Inc. 13301 Highway 441 Alachua, FL 32615-8544 USA
Phone: (904) 418-2000 Fax: (904) 418-2001 www.sabineinc.com

12/3/96