SCHEMATIC DIAGRAM – 2 (MAIN 2/2: PT)

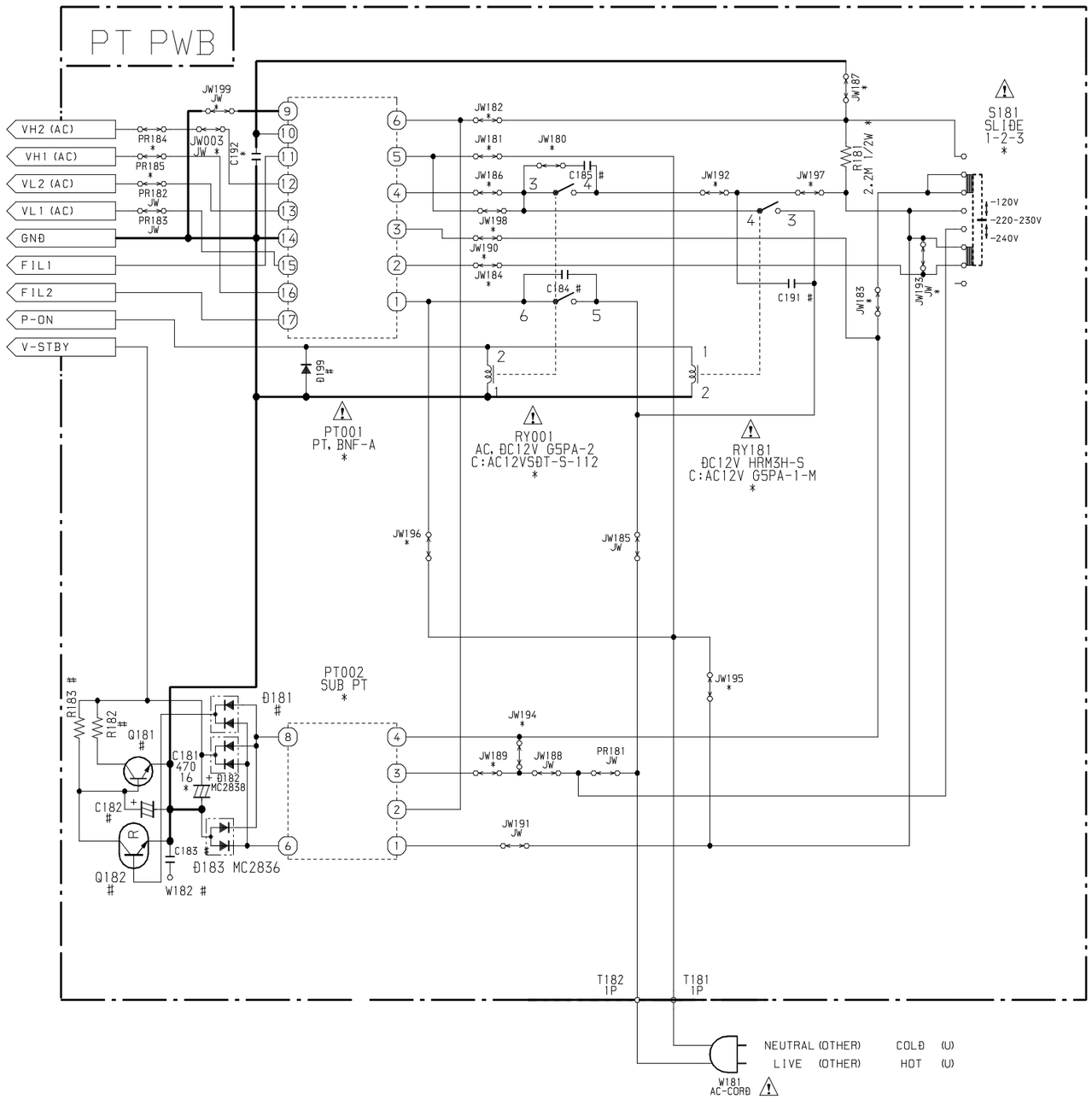

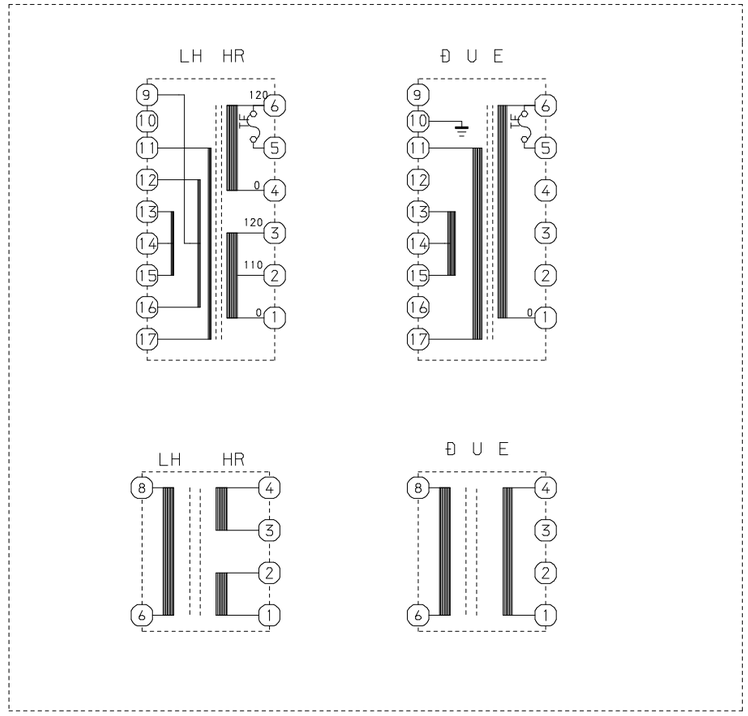

JW1003 *

T-BNF-10MAIN (P3)

A.MATUMOTO

SCHEMATIC DIAGRAM (PT)

8B NFA 630 01

KSS C000XXXX

BNF-10 CX-NSZ200, 203, 205

27 DEC 2000