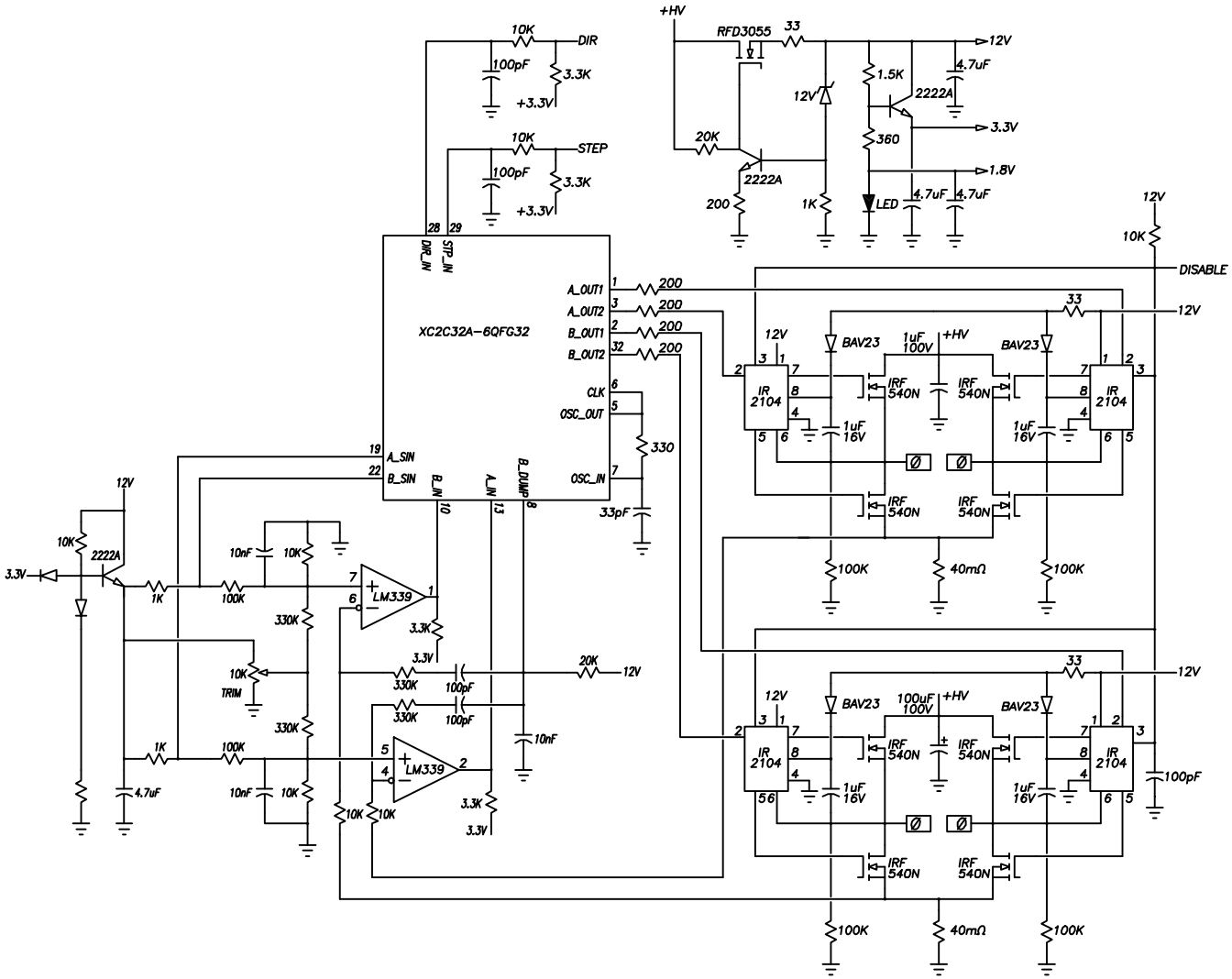
+HV
RFD3055
33
12V
4.7uF
1.5K
2222A
3.3V
360
1.8V
LED
4.7uF
4.7uF
20K
2222A
200
1K
12V
10K
DIR
100pF
3.3K
+3.3V
10K
STEP
100pF
3.3K
+3.3V
28
29
DIR_IN
STP_IN
XC2C32A-6QFG32
A_OUT1
A_OUT2
B_OUT1
B_OUT2
CLK
OSC_OUT
OSC_IN
A_SIN
B_SIN
B_IN
A_IN
B_DUMP
330
33pF
12V
10K
DISABLE
33
12V
BAV23
1uF
100V
+HV
IR
2104
IRF
540N
1uF
16V
100K
40mΩ
100K
12V
10K
2222A
3.3V
1K
100K
10nF
10K
330K
LM339
3.3K
3.3V
10K
TRIM
330K
100pF
20K
12V
330K
100pF
10nF
1K
100K
LM339
4.7uF
10nF
10K
10K
10K
3.3K
3.3V
100uF
100V
100pF