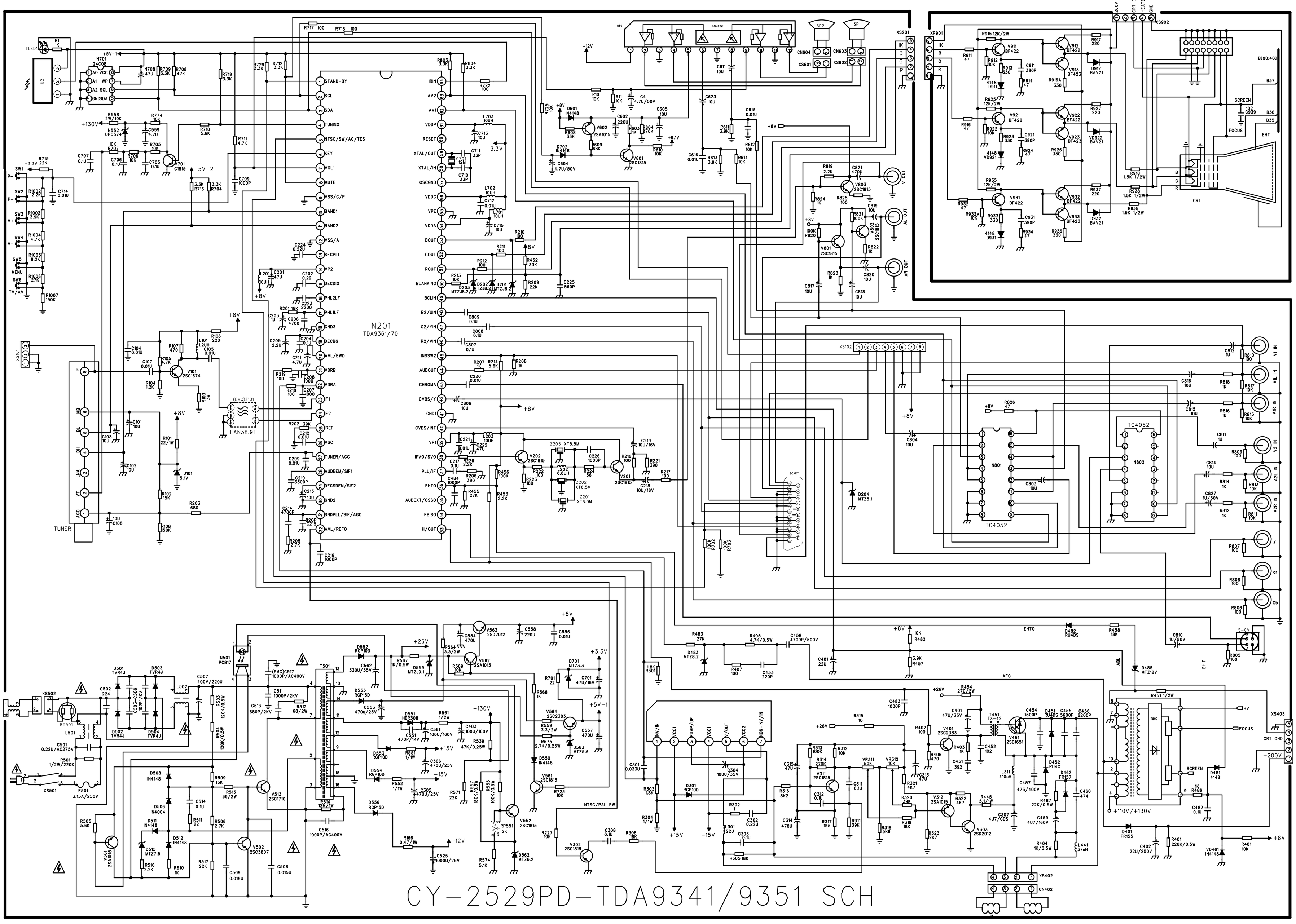
N201
TDA9361/70
N701
24C08
N501
PC817
T501
T451
TX-42
T502
N801
TC4052
N802
TC4052
XS902
CRT
XP901
XS201
XS102
XS402
CN402
XS403
XS501
XS502
XS301
TUNER
LAN38.9T
SCART
SP1
SP2
CN603
CN604
XS601
XS602
N601
AN7522
U2
TLED1
V901
V911
V912
V913
V916A
V921
V922
V923
V926
V931
V932
V933
V936
V803
V801
V802
V101
V201
V202
V302
V501
V502
V513
V552
V561
V562
V563
V564
V601
V602
V701
V401
V451
V312
V303
V311
V501
Z201
Z202
Z203
CY-2529PD-TDA9341/9351 SCH