# Welcome

Welcome to the Free Lumenlab Guide.



Before reading into the guide, you should read the Disclaimer.

## Contents

# Disclaimer

By reading this document, you (the reader) agrees to not hold liable the makers of this document for any adverse effects that may come by the use of this document which includes, but is not limited to personal injury or property damage. By using the directions in this manual to make a DIY Video Projector, you agree that you have read and understand this disclaimer and have read and understood that you are soley responsible for your own safety. **THERE IS NO WARRANTY EXPRESSED OR IMPLIED BY THE USAGE OF THIS DOCUMENT**.

# ESD Warning

Lcd panels and micro circuitry are subject to damage by ***electrostatic discharge*.** Before handling or working with electronics the user should be properly grounded. A grounding strap and mat is recommended, (available from Radio Shack).

# Lamp Warning

The lamps used in this project can not be turned off and restarted immediately. They generally have a hot restrike time of several minutes. Please observe all safety precautions on the lamp packaging.
Have fun!

# Introduction


Yes you can build a high quality lcd video projector for a fraction of the cost of a consumer video projector. As a matter of fact you can build a high quality XGA projector for the cost of a light bulb for a consumer projector! (A light bulb for a consumer projector costs between $250-$600!) This project is fun and relatively simple. It can be completed in a few days if you have obtained your parts. In the following example the total cost was $400, using all new components. You can save even more money by sourcing used components from Ebay...it's up to you. You can take your projector all the way to HDTV by using a high quality lcd panel. There are many advantages to building it yourself! You learn in the process and get to make it exactly the way you want. Your friends and family will be impressed to say the least, and you will have many years of enjoyment from your creation. The best part is when you need a new bulb years from now, it will only cost you $15 - $50! This project can be fun for the whole family and would make an excellent science fair exhibit. This guide should contain the basics you need to get you on your way, but even more information is provided in the user forums, as well as a much more comprehensive version of the guide. I hope you enjoy building your projector as much as I did!

# Fresnel Lenses

*A thin optical lens consisting of concentric rings of segmental lenses and having a short focal length, used primarily in spotlights, overhead projectors, and the headlights of motor vehicles.*

The fresnel lens is simply a flat sheet of optical acrylic (plastic) or glass that has been embossed, molded or cut to have a series of concentric beveled circles (or beveled horizontal lines for a different type of fresnel) on its surface. When a light ray strikes the beveled edge it is bent at an angle to the bevel. The greater the angular degree of the bevel, the more the light ray is bent. All of these beveled circles acting together form a lens. Anyone who has seen a flat page magnifier has seen a fresnel lens.

The fresnel lens is a nearly perfect lens for bending raw light; it is cheap and it is large, a comparable spherical glass lens would cost a fortune.

| | |
|---|---|
| 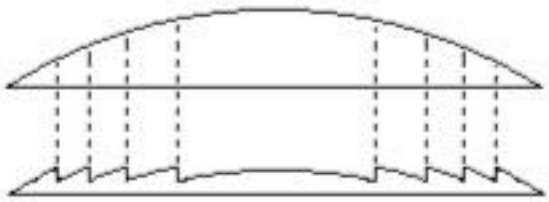 | The Fresnel lens is divided into annular zones, each of which duplicates the contour of the corresponding zone of a regular lens. With the exception of the outermost zone, each zone of a Fresnel lens is thinner than in a regular lens. The steps between the zones do reduce the Fresnel lens' optical quality, but for some applications the much reduced weight makes this a worthwhile tradeoff. |

# Projection Lens

The projection lens is simply a magnifying lens in that it takes the projected image and magnifies it onto the projection screen. This can be accomplished with what is called a singlet lens (single lens). Problems occur when using a singlet lens, namely chromatic and spherical aberration, which is the tendency of a single lens to shift or distort the color information and the image information. To correct these aberrations, other lenses can be used to compensate for the singlet lens' problems. The most common lenses used in projectors today are triplet lenses. The triplet lens contains 3 lenses in total; a magnifying lens and two additional lenses that correct for aberrations in the magnifying lens. Fortunately, high quality triplet lens assemblies are widely used in overhead projectors and readily available.

The focal length of your projection lens is important to the construction of the projector, and should be matched to your collector Fresnel Lens. The focal length of our projection lens for this project is 320mm.

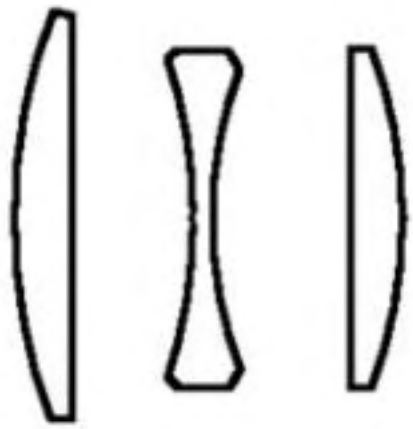

Arrangement of triplet lenses.

Lens triplet assembly

# Light Flow

In our projector we need to control the flow of light through the projector. Anyone who has ever started a fire with a magnifying glass will know that the lens concentrates the sunlight to a point, thus concentrating the heat in the light. If you were to measure the distance from the lens to the point of light your magnifier focused, you would have the **focal length*** of your lens, measured in millimeters. Imagine reversing the situation. We want to take a point of light (our bulb) and distribute it evenly over a large surface (our LCD panel). We want to use a point light source because we can accurately control the light with a fresnel lens to be distributed very evenly over the entire LCD module This is where we will use our first fresnel lens. When using the fresnel lens this way we are using it as a **collimating or condensing lens** (fig 1a)

* Focal length is defined as the distance from the lens to a point where parallel rays are focused to a point (diverge), traditionally measured in millimeters (mm).

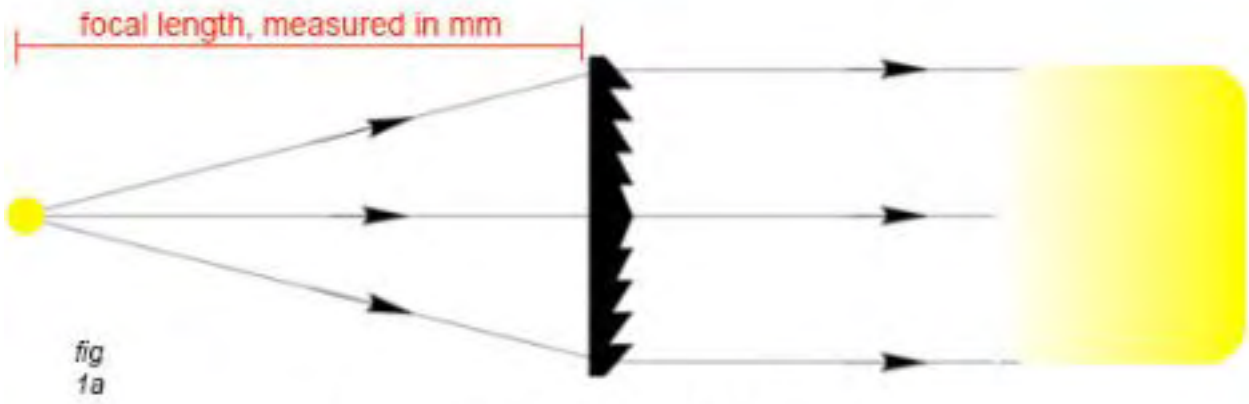


A collimator or condenser fresnel lens

By placing the collimating fresnel in front of our point light source we get a nice parallel (collimated) distribution of the light. This evens the light across the entire surface of the fresnel which ideally is the same size or slightly larger than our lcd panel.

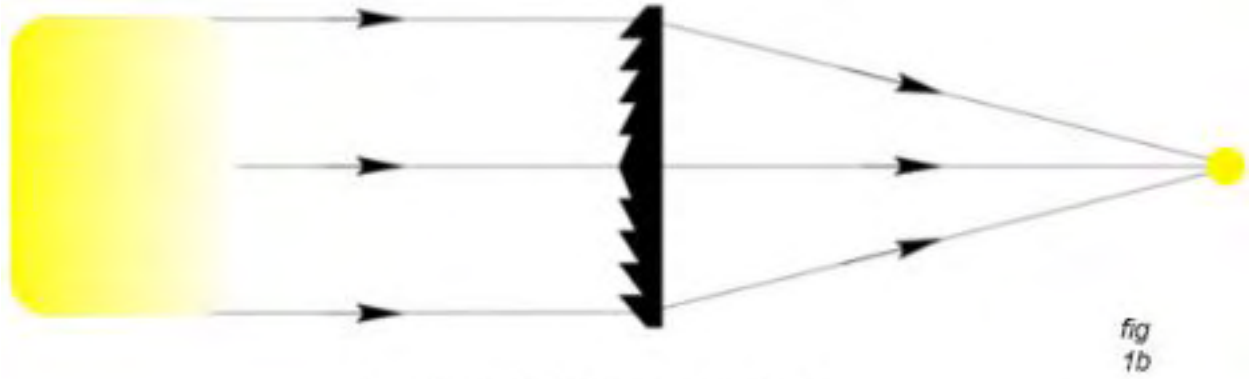


A collector or field fresnel lens

If we took our collimating fresnel and turned it around, we would have a **collector or field lens** (fig 1b). A collector lens bends diffuse light towards a point. This is useful for our projector as well because we want all of the available light focused on our projection lens. Otherwise much of the light would be wasted since it didn't pass through our projection lens. Figure 1c illustrates this point.

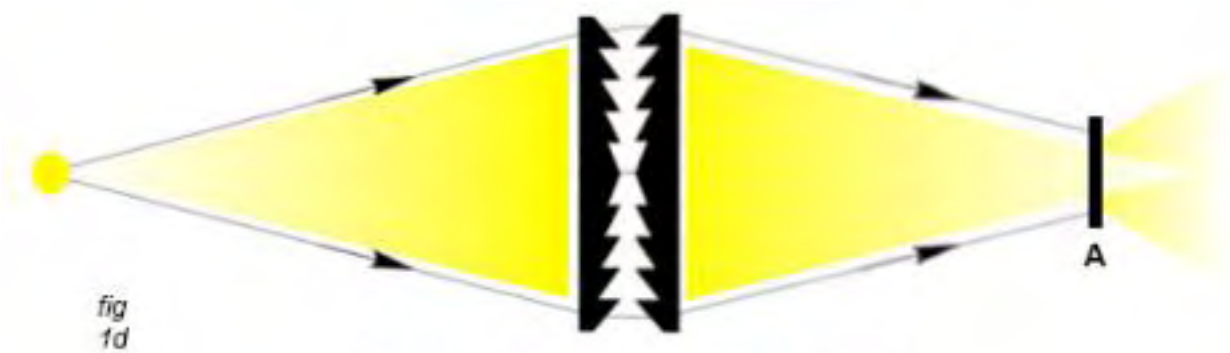


Optimal light flow through the lenses

Now we have all of the light collected through our projection lens (A).

# Simple Optics

The design in fig 2 is perhaps the easiest projector to build and the projection is quite good if attention is paid to optical alignment. In this case the glass ‘isolation’ plate (**2**) is used to isolate the lamp’s heat from the LCD module (**4**). Most consumer grade LCD modules have an upper temperature limit of 105°*f*/40°C (check your specs) so care must be made to ensure the panel doesn’t overheat. We will discuss cooling system design later.

As you can see from area **A**, much of the available light is ‘wasted’, but this design is still adequate if using a large metal halide lamp. The lamp used in this design is the LL65K T15 lamp, available from the Lumenlab store. Much of the ‘wasted’ light could be gathered by the use of another optic called a **reflector**, which isn’t used in the design below.

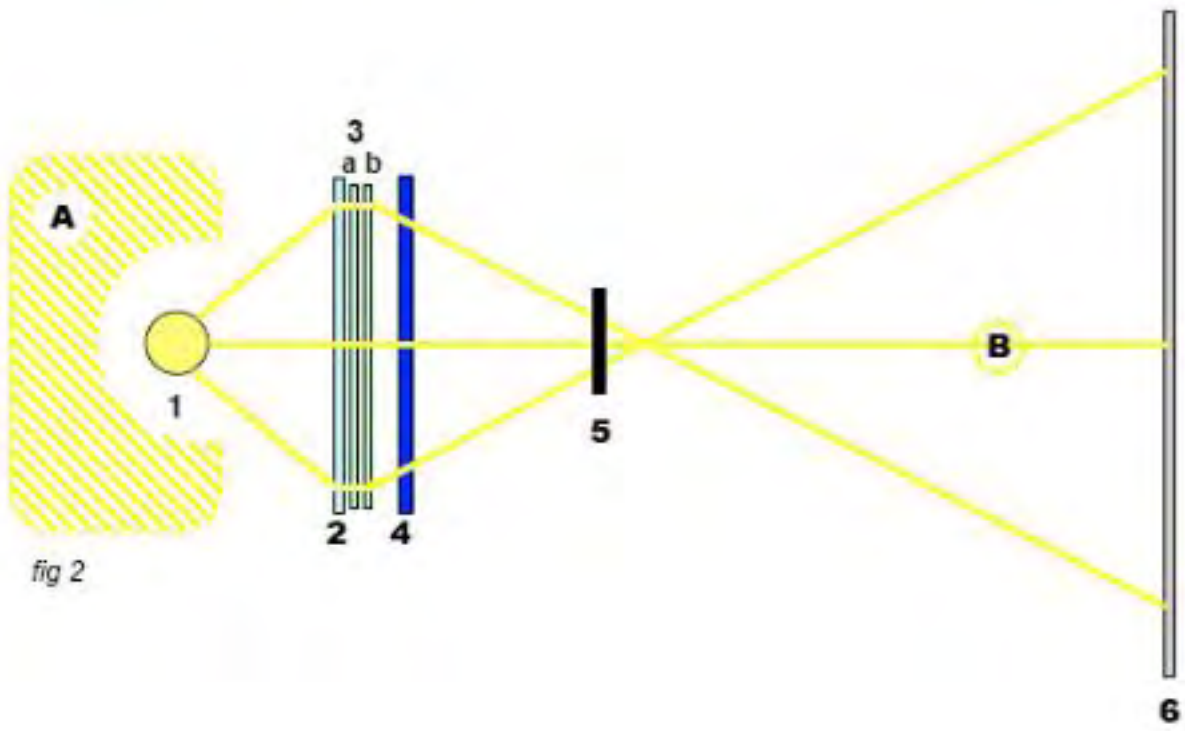

fig 2

1. Point light source: LL65K T15 Lamp
2. Tempered glass ‘isolation’ plate 1/8” thick
3. 2 Fresnel lenses, a: 220mm FL collimator (condenser) and b: 330mm FL collector (field)
4. LCD module, 15” (A comprehensive database of usable panels is available in the user forums)
5. Projection Lens 80mm diameter, 320mm FL
6. Screen

*A. ***Wasted Light***
*B. Light path

# Better Optics

LCD panels work best when the light moving through them is perfectly straight, or *collimated*. We can achieve this by placing our collector fresnel in front of the LCD panel allowing the collimating lens to work alone behind the panel. This method is not recommended with lower quality fresnel lenses because a low quality lens will degrade the quality of the image as it passes through. Lumenlab has sourced lenses of sufficient quality to allow the collector to be placed in front of the panel. This allows for more efficient and even lighting through the panel, and also allows for keystone correction up to 15º. Keystone correction is discussed later in this guide. Order the Lumenlab Mega-Projection Kit for all of the lenses you need for the projector.

By using a smaller form factor lamp such as the LL65K T15 we can use a reflector with our lamp which will greatly increase the available lumens from the lamp arc. The reflector we are using is the Lumenlab Pro Reflector. The lamp arc should be placed at the focal point of the spherical reflector to reflect the light back through the arc. The focal point of a sphere is its center. If the lamp arc is moved toward the focal surface (to the left in fig 2a) the light will become collimated and would require additional optics to use in our projector.

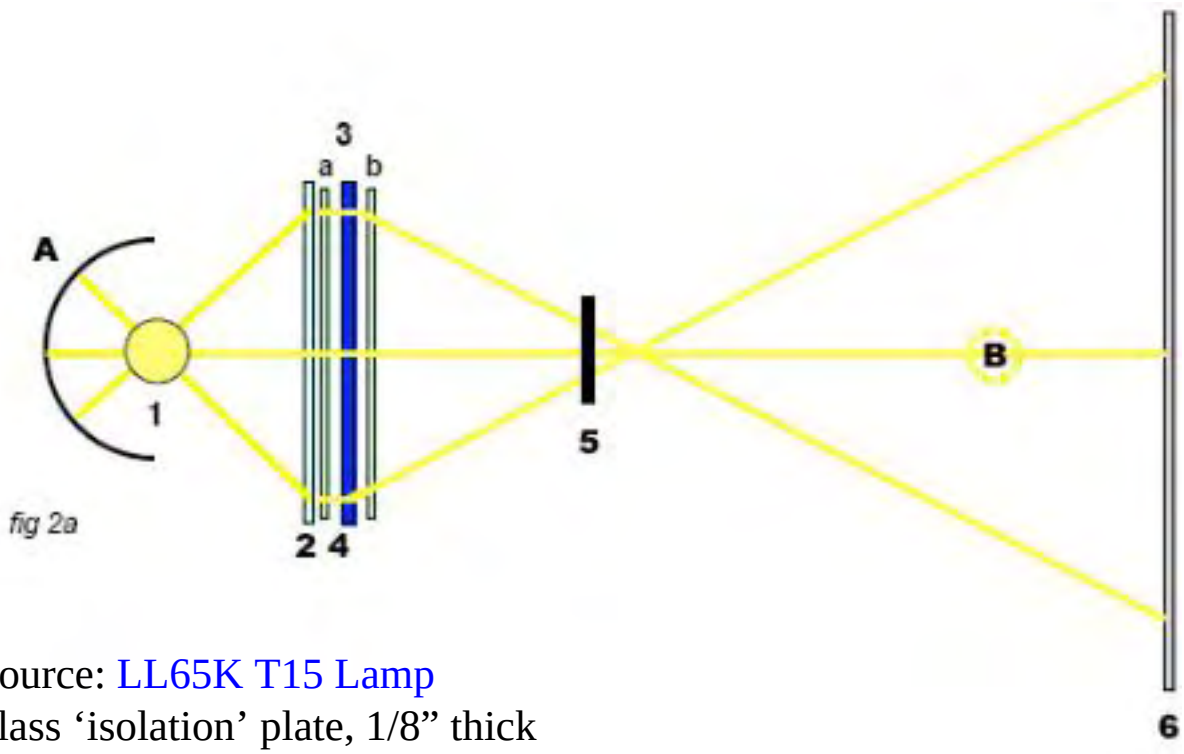

fig 2a

1. Point light source: LL65K T15 Lamp
2. Tempered glass ‘isolation’ plate, 1/8” thick
3. 2 Fresnel lenses, a: 220mm FL collimator (condenser) and b: 330mm FL collector (field)
4. LCD module, 15” (A comprehensive database of usable panels is available in the user forums)
5. Projection Lens 80mm diameter, 320mm FL 6. Screen

*A. Pro Reflector (Available here.)
*B. Light path

# LCD Panels

The heart of the 15” projector is the TFT LCD panel. The LCD panel is translucent, which is how we can shine a light through it and project the image created on the panel. If you’re interested in how a LCD panel works I would suggest reading: http://computer.howstuffworks.com/lcd.htm


3a. A common lcd computer monitor

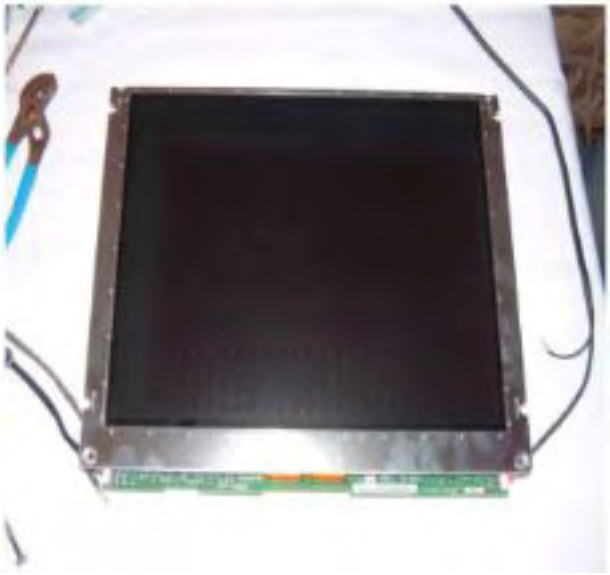

3b. A ‘stripped’ LCD monitor

‘Raw’ panels are available, but we will be using a LCD panel from a common computer monitor. While it would seem easier to buy a bare panel rather than strip a computer monitor, it isn’t. The primary reason is expense. To buy a bare panel with the same specs you would have to spend several times the amount for which you can get a common computer LCD monitor. Strange isn’t it? Thanks to market forces the assembled computer monitor is ubiquitous and cheap comparatively. New computer LCD monitors can be found for as little as $125, but there are some issues you should be aware of before buying one. The first consideration is quality; that is, how good do you want your projection to be?

LCD monitors come in a variety of resolutions, contrast ratios, diagonal sizes, response times and dot pitches. **Resolution should be as high as possible. Contrast ratio should be as great as possible. Diagonal size should be as small as possible. Dot pitch should be as small as possible...in a perfect world.**

Realistically excellent quality projections can be made with resolutions as low as 800x600 pixels (SVGA)...and many quality panels are available rather cheaply. For the 15” projector an excellent panel would be a 1024x768 (XGA) monitor with a 400:1 contrast ratio, 15ms response time and .28 dot pitch. The drawbacks of low cost panels meeting these specs are their size: 15” diagonal. The bigger the panel, the bigger the enclosure, optics etc. Naturally we’d want our projector to be as small as possible in most cases. Economics require us to use panels that are 7” or bigger; the cost skyrockets for high resolution sizes smaller than 7”. A 15” high quality panel is very affordable, for the XGA panel mentioned above we’d pay ~$150 new and as little as $50 used as of this writing. The 15” CMV 1515 in the picture above (3a.) meets our requirements with XGA resolution, 500:1 contrast, 15ms response and .28 dot pitch. This panel may or may not be available in the United States at any given time. Most budget high quality panels are imported from China and supplies can be sporadic.

# Stripping an LCD Panel

Also of importance is a problem with the way that some monitors are designed. In order to make the monitors as flat as possible some manufacturers ‘fold’ the circuitry over the back of the lcd panel and then attach the circuitry with a short flat flexible cable. The cable may be too short to allow the circuit board to be moved away from the lcd panel, which would cause the circuit board to block some light through the panel. Lengthening this cable can be very difficult, although not impossible. It’s best to stick with a panel that is known not to have this problem. A list of compatible panels is available in the user forums.

Disassemble with care

Take care when disassembling the monitor. Be careful not to scratch the surface of the lcd on either side. The dark films on each side of the monitor are polarizers, they are necessary for the lcd to work properly, **DO NOT** remove them. The lcd is made of glass and can break easily. Never force anything. Remove the back light and all associated components in sequence. Remove the diffuser sheets if necessary, you should not have to peel anything! The entire disassembly should be like dismantling a sandwich.

| | |
|---|---|
|  |  |
| Flat flexible cable can be a problem | Edge connectors are fragile! |

When your panel is nearly stripped, start paying attention to the edge connectors. They are delicate and cannot be flexed very much. If one were to break part of your panel would not work. They are next to impossible to repair! At this point you should consider supporting the edge connectors. Many lcds are mounted in a metal frame. This frame can be used to support the edge connectors by applying silicone glue the the edge connector tops and gluing the metal frame to the connectors.

Reattach all the necessary circuitry needed to drive the panel, everything but the back light. Consider how you will mount this circuitry in your enclosure. If the monitor had adjustment buttons, you will need to integrate these into your enclosure design. Take your time with everything, when in doubt..stop! When your monitor is stripped you can test it's function by placing a light behind the lcd panel and powering it on with a signal source... cool huh?

By the way, detailed tutorials for stripping an LCD monitor can be found in the Lumenlab user forums.

# Lamps

LL65K T15

Although there are many lamps that can be used in your projector, our new high color rendering LL65KT15 lamp is the closest thing to sunlight you can find. Using this lamp has several advantages. A perfect color temperature, a high CRI and a lifespan rating of 20,000 hours. By comparison, the lamps in a consumer video projector have life spans of 1000-3000 hours and cost up to $200-$600 a piece! That's more than you would have to spend on your entire projector!


Mogul base

You'll also need a socket (base) for your lamp. The LL65K T15 lamp uses a Mogul base. Additionally you'll need a ballast for your lamp. Metal halide lamps use a high voltage to create an arc that excites a mixture of gasses in a quartz envelope. The ballast is what transforms normal household current into the higher voltage. There are two types of ballasts you may consider, 'electronic' and 'coil and core'. Electronic ballasts are solid state, compact and lightweight, efficient and run much cooler than a coil ballast.
The Lumenlab Store can supply you with all of your lighting gear.

Sexy Electronic Ballast

Understand that the ballast needs to be matched with the lamp. You cannot use a ballast for a high pressure sodium lamp with a metal halide lamp! You cannot use a 250 watt ballast with a 400 watt lamp!

**⚠WARNING: Working with line voltages can be very hazardous. These instructions cannot teach you about 120 volt wiring and safety. If you do NOT understand basic 120 volt wiring STOP NOW. Metal halide bulbs can emit dangerous UV radiation if the outer glass envelope is cracked. DO NOT USE A DAMAGED BULB! These bulbs become hot and can burn you, use common sense and be very careful. Do not look at the bulb for any extended period of time, it will burn your eyes!**

# Putting It Together

Look at this illustration:

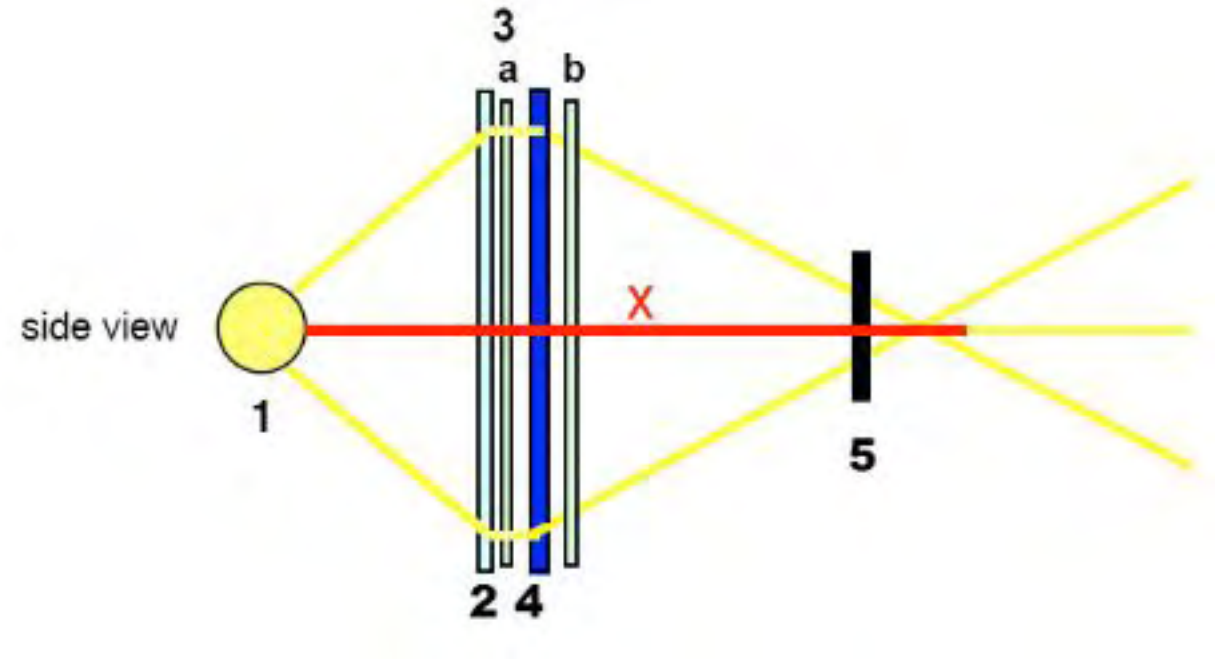


Number **1** is our point light source, the LL65K T15 lamp. It is important that the lamp center (arc) be on center (line **X**) with the entire enclosure and at the focus of the first fresnel (3a). The fresnel lenses (3a+b) and projection lens (5) can be purchased from the Lumenlab store. The Lumenlab custom fresnels have been specially made for a 15" projector. They are already the proper size, groove pitch and thickness. The fresnel lens on the lamp side has a shorter focal length of ~220mm, and the fresnel lens facing the projection lens has a focal length of ~330mm. This is advantageous because we can have the lamp a little closer to the lens, which means less light is 'lost'. Our piece of isolation glass (2) makes a great mount for the collimator fresnel. Never mount the fresnel on the lamp side of the glass, it will melt! The isolation glass (2) should be a piece of 1/8" tempered glass cut to size. Lexan can also be used. These are readily available at most hardware stores for a few dollars, but tempered glass can take a week to obtain so plan ahead.

⚠Be sure to tell the hardware store that you do NOT want your tempered glass to have a stamp or bug (safety glass label). If they stamp it the stamp might be in the way of the projection.

Size the isolation glass 1/2" shorter than your enclosure height. This is so that the glass can sit off of the bottom by 1/2" which is necessary for the cooling circuit (explained later).

The projection lens (5) is a 320mm focal length lens triplet. It is important that the projection lens be centered to the other lenses and the enclosure (line *X*).

**Order the Lumenlab Lens Kit from Lumenlab for all of the optics you need for this project.**

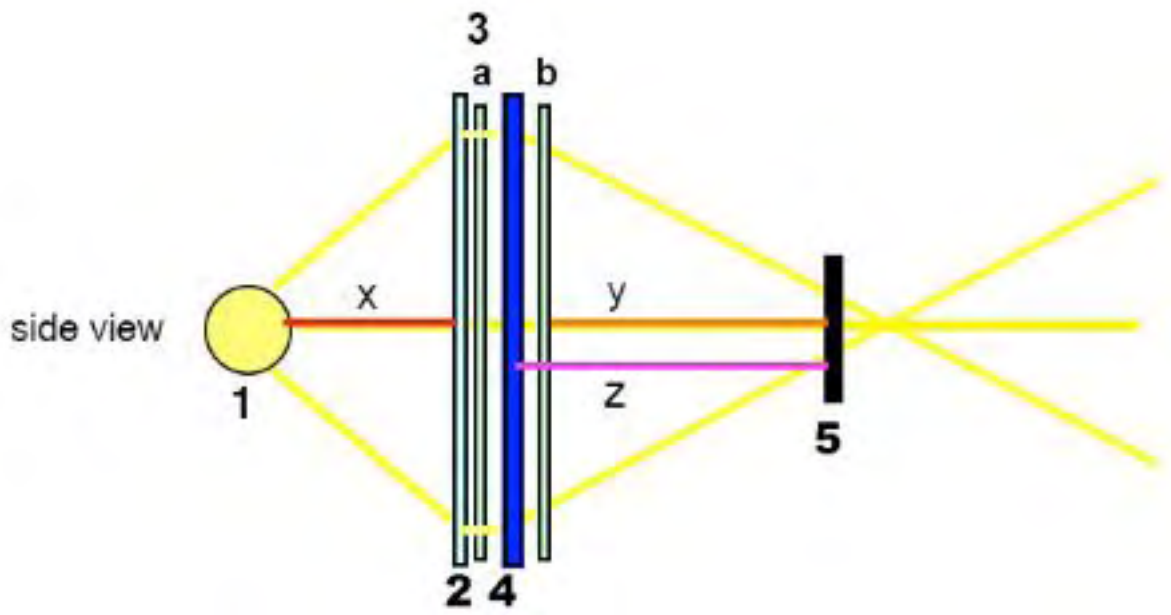


So we know that **1** is our lamp, **2** is our isolation glass, **3a+b** are the (a) collimator and (b) collector fresnel lenses, **4** is our lcd panel and **5** is our projection lens. The collimator fresnel has a rear focal length of 220mm, so we would position the center of the lamp 220mm away, as represented by line **X**. The collector fresnel has a forward focal length of 330mm, but we would position our projection lens ~320mm *away from the collector* as represented by line **Y**. The reason for this is because we want to use the entire projection lens' area, not just the center. The illustration shows that the projection lens is positioned slightly *before the focus of the forward fresnel lens.*

Our projection lens may have a focal length of 320mm, but the if the lens were only placed at its focal length from the LCD panel we would be focused on infinity, so in practical usage we would place it around ~340mm from the LCD panel as represented by line **Z (note this distance will vary with different screen sizes)**. We leave a gap of ~15mm between the condenser fresnel lens and the LCD panel and a gap of ~20mm between the collector fresnel and the LCD panel. This is desirable because if a fresnel lens is too close to the panel, the grooves on the fresnel lens will be projected too. The larger gap for the collector fresnel is to give some room for keystone tilting if needed. If you have circular lines or Moire patterns in your projection your fresnels are too close to the panel.

If you are making a focusing mechanism for your lens, you'll want about 50mm (~2") of movement in the projection lens which would accommodate virtually every usable setting in which you would use your projector. This means your projection lens range would be 320mm to 370mm from the LCD panel.

Also of note is that there is some tolerance in the focal lengths of the lenses. If you have lines in your projection because the fresnel is too close, you should be able to distance it more without a problem.

⚠ **See the Lumenlab Pro Guide and the User Forums for much more information regarding lens placements, distances, techniques for mounting lenses and methods for building focus boxes!**

⚠ Because the optics invert the image on the LCD panel, the panel will be mounted upside down and flipped from left to right. Basically you want what used to be the front of the panel facing the light, and turned upside down.

# Keeping It Cool

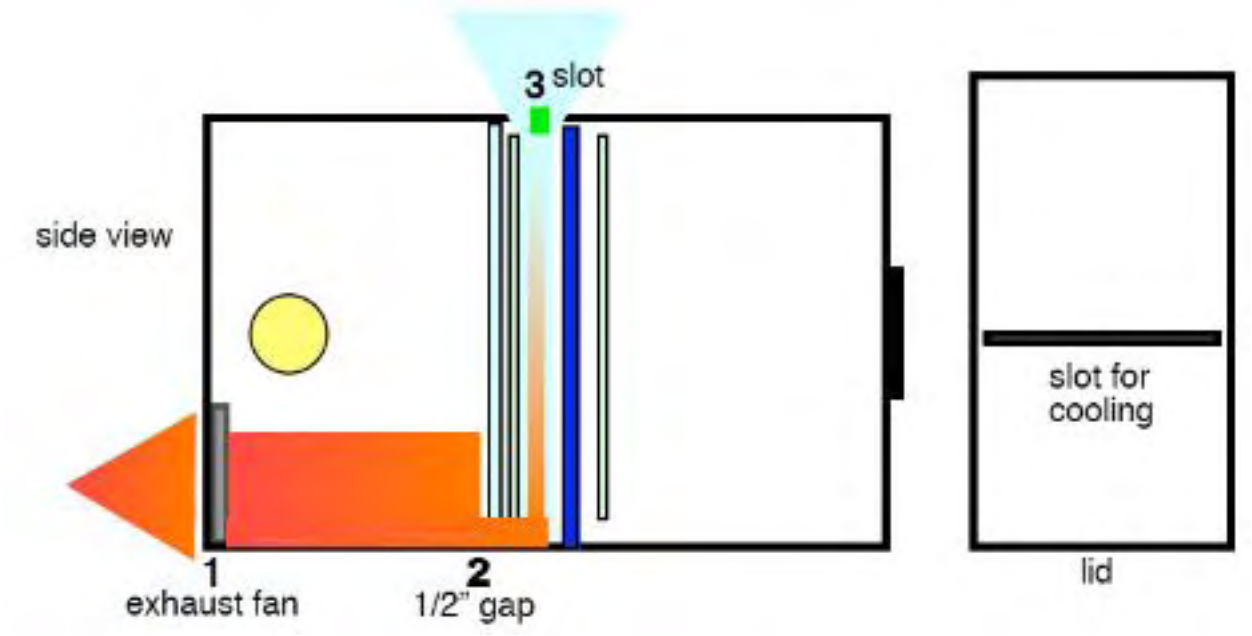


In the 15” projector I designed a cooling system that only needs one exhaust fan (**1**). The fan I chose is an inexpensive 120mm Ball Bearing fan. It is critical that the lcd panel does not exceed 105°ƒ/40°C during operation, so have your meat thermometer handy when testing. I specified that you should have your tempered glass cut 1/2” shorter than your enclosure height. This is to allow cooling air to pass under the glass at point **2**. Cut a 3/8” slot most of the way across your enclosure lid to admit the air (point **3**). Not much light will escape from the slot (**3**) but use a piece of air conditioner filter cloth on the underside of the slot to block light leakage and keep the panel from getting dusty from the incoming air. In designing the cooling system this way, the lcd panel gets top priority. A large volume of air travels through the gap between the fresnels and the panel, cooling both simultaneously. DO NOT put the fresnel lenses on the lamp side of the glass, they will melt! With this design I can keep my panel at a constant 95°ƒ/35°C during operation. I suggest putting your meat thermometer in the top slot to observe the panel temp over several hours of operation until you are CERTAIN it can maintain a constant temperature.

If you’re using a wood enclosure I would recommend that you use aluminum flashing on the interior of the lamp side of the enclosure. This is to prevent any scorching from the lamp. Keep your wiring away from the lamp. Secure all wiring to make sure it doesn’t move and end up on the lamp. Leave a space of 2” at least between the back of the lamp and enclosure. Pay careful attention during the first few hours of operation for fire hazards. If carefully designed and maintained the projector should run for many years safely.

It is also advantageous to use a DPST switch for your wiring; one pole for the lamp and panel, and another for the fan. Used in combination with a thermal switch, the fan can be made to run automatically after you shut down the projector, until the projector is cool. A power entry module is a safe way to get power to your box, and a circuit breaker provides the needed fire and safety protection. All of these items and a power cord are available in our 120V Wiring Kit and Mega-Projector Kit on the Lumenlab Store.

# Building The Enclosure

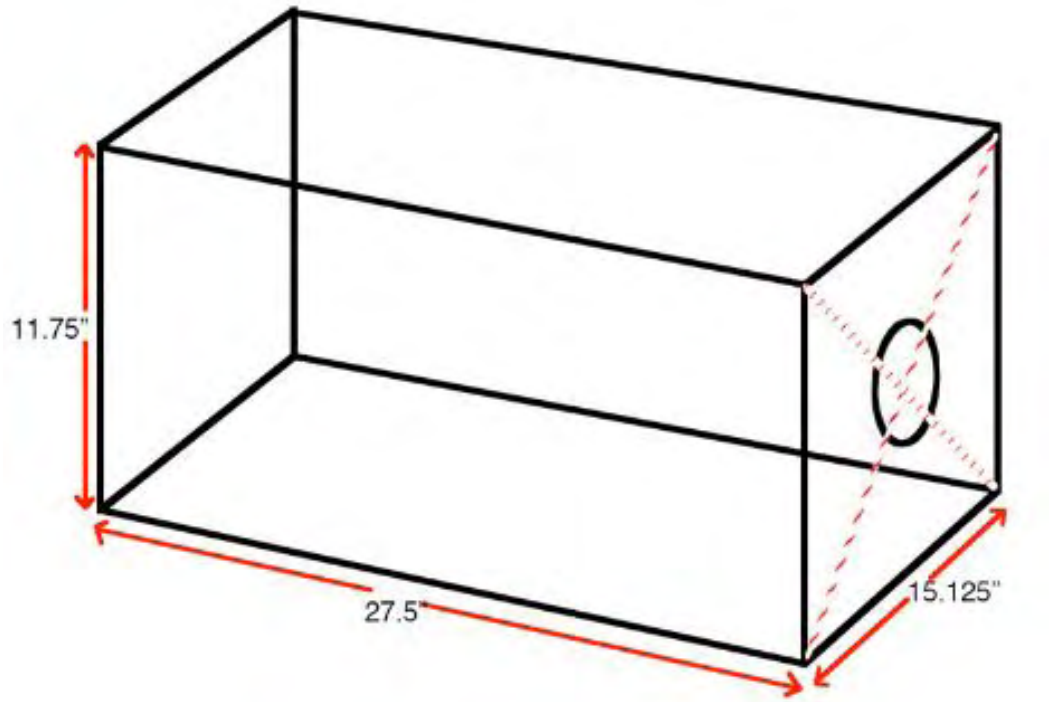


**Simple projector enclosure design based on a 15” lcd monitor**

The dimensions shown are what my first projector came out to be. I do not recommend you use these dimensions for your enclosure because your components may vary in size and you should carefully measure all of your components BEFORE cutting your enclosure. This is probably the most basic enclosure you can build. The lens needs to be perfectly centered. To ascertain the center, draw lines diagonally on your front piece as is indicated in the drawing by the red dotted lines.

| | |
|---|---|
|  |  |
| Centering the projection lens | Cutting the hole for the projection lens |

| | |
|---|---|
|  | Finishing the prototype enclosure. Note there is no focusing mechanism. I didn't need one for this projector because I knew the distance to my screen and my projection lens has a flange that allows about 1/2" of travel forward and backward for fine focus. If you plan to use your projector in a variety of settings you should make the panel that the projection lens is mounted on movable by about 2 inches. There are many great focus box designs in the user forums. |

| | |
|---|---|
|  |  |
| Mount the electronics in a logical way. | Monitor the temperature during testing closely using a meat thermometer. Be careful not to scratch your lcd panel with the thermometer. The temperature in the photo reads 110f, too hot! |

# Great Designs from the Lumenlab Forums:

Haas_man's awesome 15" Lumenlab projector:

Detailed design plans are available in the user forums!

Savo's ceiling mounted projector.

Detailed design plans are available in the user forums!

Kjudki's box:

Detailed design plans are available in the user forums!

Joe's bakery projector:


These are just a few examples out of thousands of designs available in the user forums!

# Component Layout

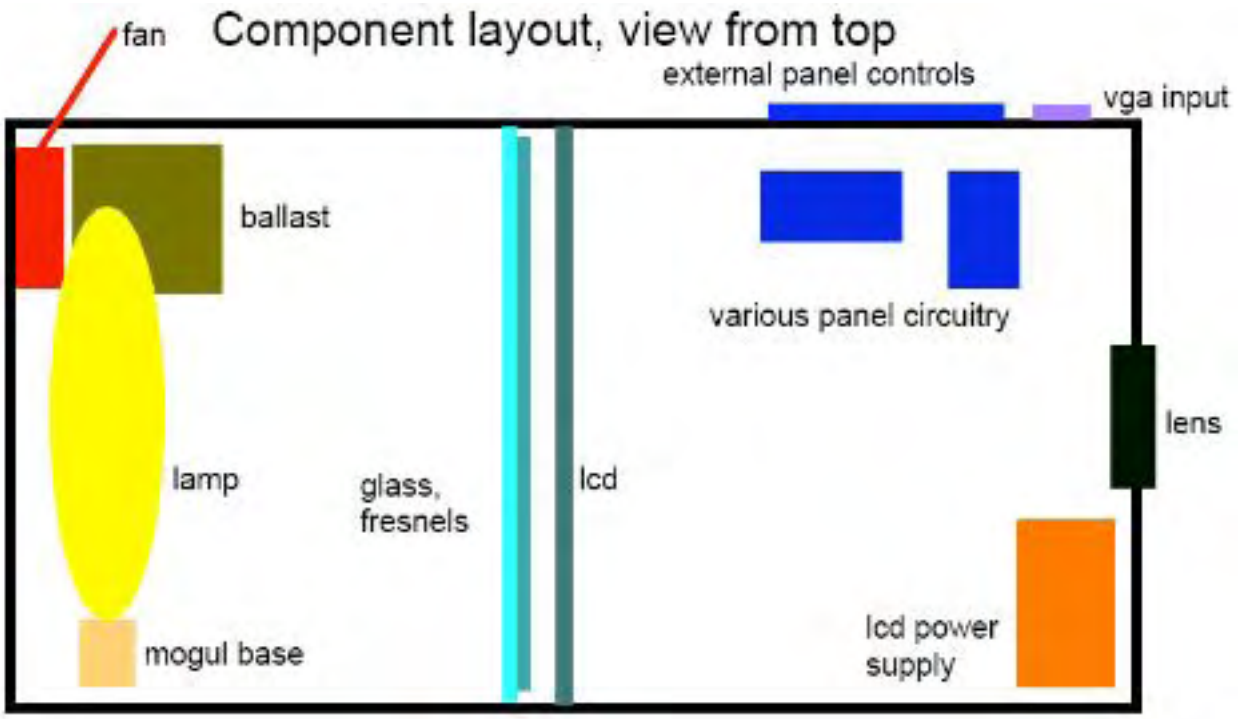


This is how I layed out the components in my projector. Your panel may have different components but the idea is the same.

# Simple Wiring

This is a very basic wiring diagram. There are many better ways to wire a projector available in the user forums.

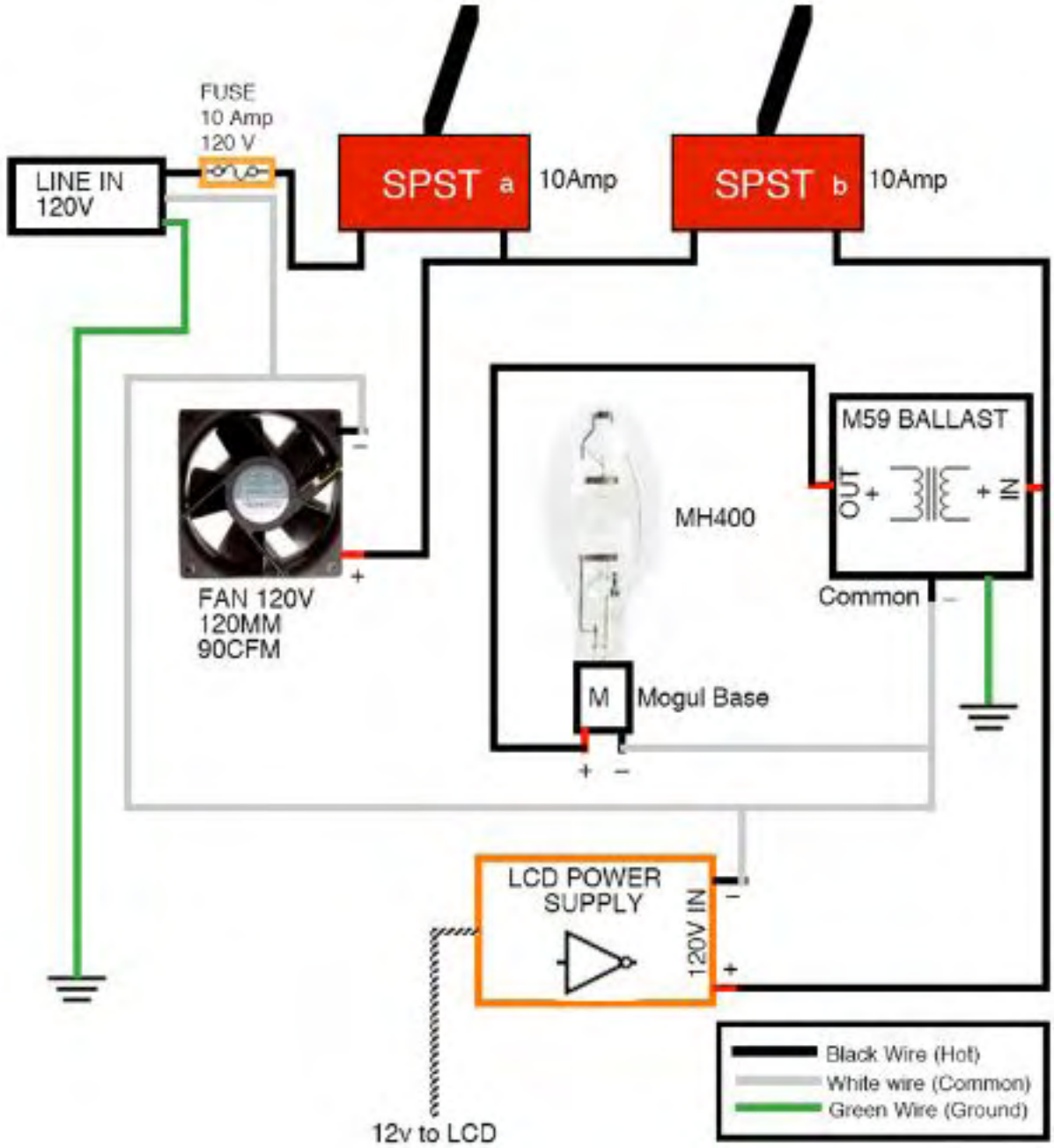


This wiring scheme makes use of a dual switch interlock. The interlock makes it impossible to start the lamp without powering on the fan first. You should also let the fan run for about 5 minutes after shutting down the lamp to continue to cool the enclosure.

**⚠ YOU ARE WORKING WITH HIGH LEVEL MAINS VOLTAGE. TAKE EVERY PRECAUTION TO AVOID INJURY AND/OR DEATH!**

Always unplug, and turn switches off (and remove the fuse) before working with the internal wiring. Also use caution when working with the ballast and LCD power supply, transformers used in these devices are capable of storing very high levels of power that can cause serious injury and/or death! Always follow instructions for ballast wiring, and when in doubt seek advice/help! Lumenlab is NOT responsible for your safety!

# Projection Screens

Discussions and opinions on screen types and materials are abundant and hotly debated. The bottom line is; a flat-white, smooth wall is for all intents and purposes a nearly perfect screen. Screen materials can have various properties to enhance the picture, namely ‘gain’, contrast and color correction. A very light grey screen can improve contrast in low contrast projections, the trade off is a lower gain screen. Gain is a screen’s ability to increase reflectivity in the line of viewing. Of course no screen can reflect more light than the projector can make, but it can reflect that light directly back at the viewer rather than diffusing it as a flat white surface will. The disadvantage to this is a lessened viewing angle and ‘hot spots’. Gain in usually increased by adding a silvery surface or glass bead to the screen material. Many have made high gain screens themselves by experimenting with various silver paints or gesso combinations. Older lcd panels have what is called ‘green push’, meaning they have a slight green tint to the picture. Adding a bit of yellow to the screen material can compensate for this. These types of screens shouldn’t be necessary if you are using a quality lcd panel and good lighting in your projector. Halogen lamps are bad for video projectors because the light is yellow rather than white. Flourescent bulbs can’t make enough light and aren’t point light sources. Metal halide lamps are capable of high output and very white colors and are the lamp of choice for video projectors. Use of proper lighting and quality lcd panels should negate the need for a fancy or expensive screen. (Screens can cost many thousands of dollars.)

If you’re interested in a fabric screen there are many options available to you. The material used for movie screens is available from sources online, but it is quite expensive usually and the benefit isn’t tremendous over a common material called ‘blackout cloth’. Blackout cloth is a heavy material used behind drapes to block incoming light. It is a white or light grey rubberized fabric. It has a cloth side and a very smooth flat white side that makes an excellent screen material.

Adding a flat black border to your screen can greatly enhance viewing as it tends to minimize off screen distractions. Black felt works well and is available at fabric stores. If you are using a painted wall you can simply paint a flat black border around your screen area, but felt looks a bit better. Using a black border can be challenging if you use your projector for mostly 16:9 wide screen movie presentations; when you switch to a 4:3 aspect ratio your black border will be in the picture. My set up is geared toward wide screen presentations so I occasionally have problems when I need to project a 4:3

presentation. You could have 2 screens, one for each type of presentation, or you could have a screen that rolls up and down depending on the type of presentation you are projecting. Or you could simply have a large 4:3 screen that you use for both types of presentation, but the results won’t be as good a a black bordered 16:9 screen. If you use a fabric screen you can build a light wooden frame for it or you can get fancy and buy/build a ‘tubular motor’ which would allow your screen to roll up and down at the push of a button.

# Important Considerations

Depending on the monitor/panel you choose you may only have VGA (computer monitor) inputs. This basically means that you can only send signal to your projector with a computer unless you have a dvd player with a VGA output (available online for $50 and up). LCD monitors are available with VGA, component and composite (standard rca) inputs but they tend to cost much more for no apparent reason. Having VGA inputs only isn't so much of a problem though. You can use your computer's video card to 'passthrough' video if you have such a card. You can also obtain dvd players that have VGA outputs. Probably the best option is a 'line doubler' or 'external TV box'. These are relatively cheap devices that have several types of inputs (VGA, composite, component, s-video, coax) and a VGA output. They may come with a TV tuner and remote as well. Your video projector is a high resolution device capable of displaying 1024x796 pixels or higher (or lower) depending on the monitor you selected. This is important to note because regular television is low resolution, and has 'scan lines'; that is, a TV only displays every other line of information for each scan pass it makes. If you were to simply project a television signal through your projector your image would be small and you would see these scan lines, in other words it would look pretty bad. This is not a limitation of your projector but rather a consequence of the old TV broadcast technology. At any rate the line doubler fills in these scan lines and can sometimes up-scale the resolution of TV broadcasts to your projector resolution, 1024x768. While the picture won't look as good as a digital medium like DVD, it will be acceptable. Line doublers are discussed at length in the user forums.

Ever notice how dark it is in a movie theater? This is to keep incidental light from reflecting off the screen which would wash out the picture. It is a consequence of forward projection that the screen will reflect ambient light. That said, it is very important for you to use your projector in the darkest possible room for best results. If you have daylight leaking around your blinds it will wash out your projection. Light that is behind the screen isn't so much of a problem but it distracts your attention. This is important to consider when building your home theater. Many people put their home theaters in their basement because it is the darkest room in the house.

You'll need to carefully consider where your projector will be located. You can use the Lumenlab focal length calculator to determine throw distances and picture size.

# Keystoning

If you have your projector ceiling or floor mounted, you will be projecting at an angle to the screen. The result of this will be what is called ‘keystoning’ which is that the image will be narrower at the top or bottom. If this is the way you plan to mount your projector you will want to use keystone correction. To adjust keystone mount the collector fresnel lens in **front** of your lcd panel. If you do so, you can tilt the forward fresnel to compensate for the angle of projection. It is imperative that your lens be absolutely clean and scratch free, and perfectly flat. To achieve this you can mount the forward fresnel in a metal frame or affix it to a piece of glass. You will have to mount the lens 1/2” or more from your panel to avoid the fresnel artifacting in your picture. There are many ideas for framing your lenses and keystone adjustments in the user forums.

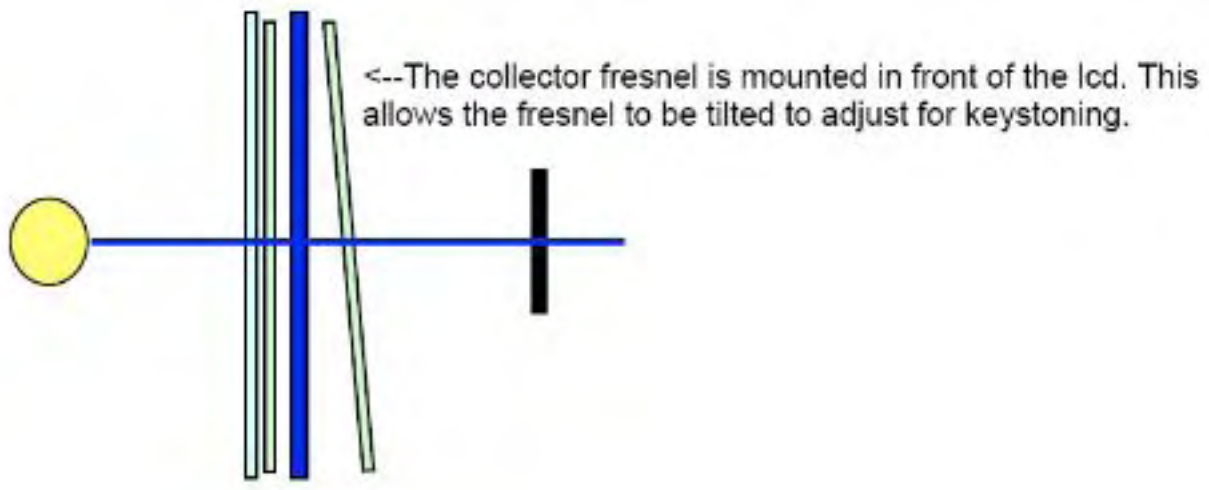

# Panel Controls

Your lcd monitor probably came with adjustment controls. You may also have color adjustments as well as size and position adjustments. You can adjust these controls to suit your taste.

Periodically check your panel’s controls, occasionally they may revert to their defaults. If your projection looks suddenly dim, it is most likely that the contrast setting defaulted.

# Parts List

- 1 LL65K T15 metal halide lamp
- 1 Mogul Base HID Socket
- 1 400 watt metal halide ballast
- 1 Projection lens triplet
- 2 Fresnel lenses, focal lengths: ~220mm, ~320mm
- 1 15” LCD panel
- 1 Piece tempered glass
- 1 120mm Fan and 12v AC adapter
- 1 piece 1”-2” x 5” .125” Aluminum strip for lamp base bracket
- Several small pieces of aluminum flashing.
- Various electrical: switches, wiring
- Enclosure material: wood, metal, mdf etc.
- Fasteners
- Air conditioner filter cloth
- White wall or screen material

# Results

Spirited away with my friend Scott.

Fractals


Quake III, really big

Joe Werb’s Lumenlab projector

Joe Werb’s Lumenlab projector

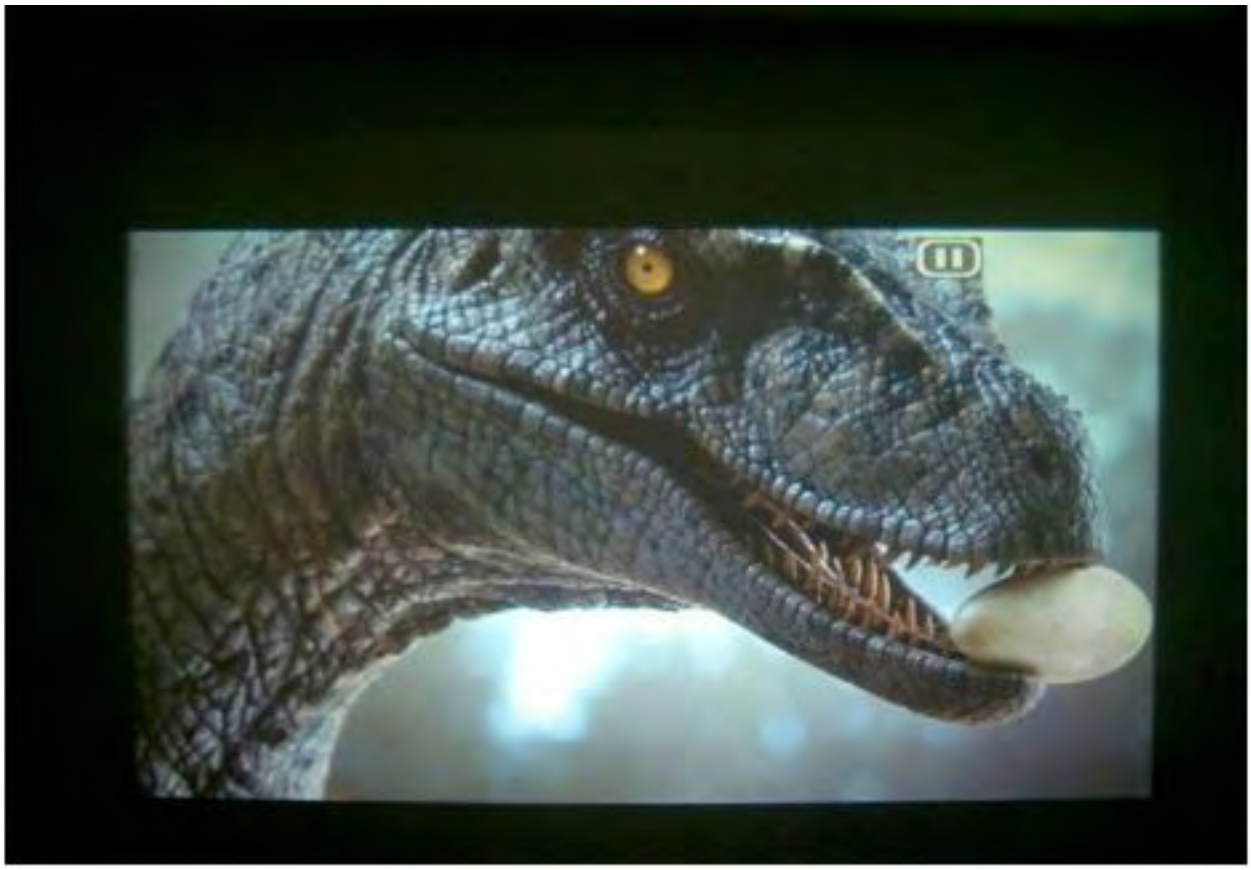

Tryn2havefun's Lumenlab projector

# Conclusion

I hope this project is as fun and rewarding for you as it was for me. My family and friends have enjoyed our prototype projector for months without a single problem. The total costs for this prototype projector was $400 with all new components. The CMV1515 lcd monitor was $225 (excellent brand new LCD panels are down to $150!). A comprehensive list of usable LCDs is available in the user forums. Of course you could spend much less or more depending on your selection of components. Some have built decent projectors for as little as $100. This projector can be completed in about 2 days time if you have all of your components and materials at hand. Even at $400 this projector is a great bargain. A comparable XGA projector could cost thousands, and the lamp for it alone could cost near $400. I won't have to change my lamp for many years! You also get a big 'wow' factor out of this projector. Your friends and family will be impressed to say the least. Of course the most fun is sitting back with some friends and a big bowl of popcorn and enjoying your own movie theater.

Please be safe and use your wits when engaging in a project such as this. Always put your safety first!