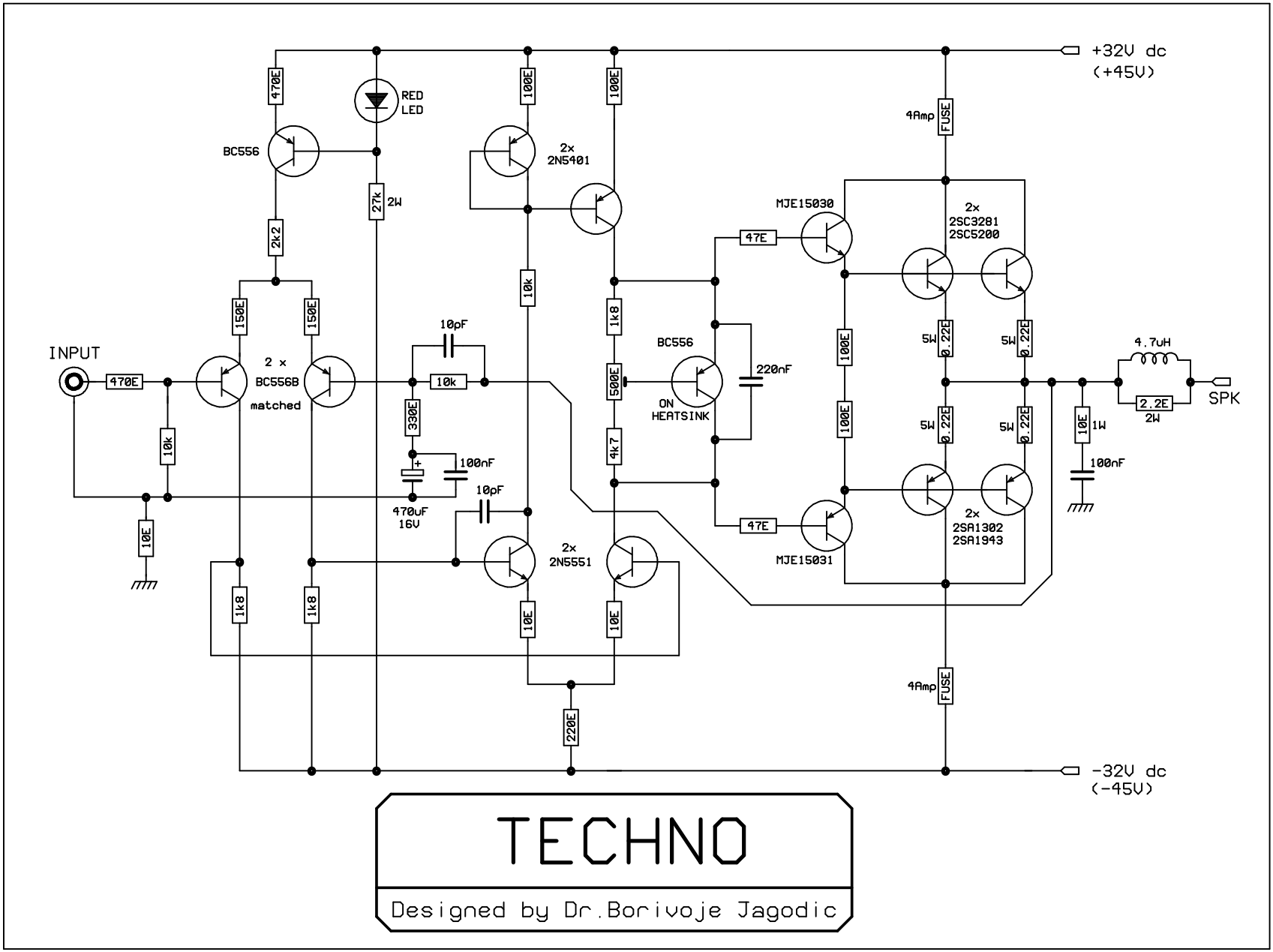

TECHNO

Designed by Dr.Borivoje Jagodic