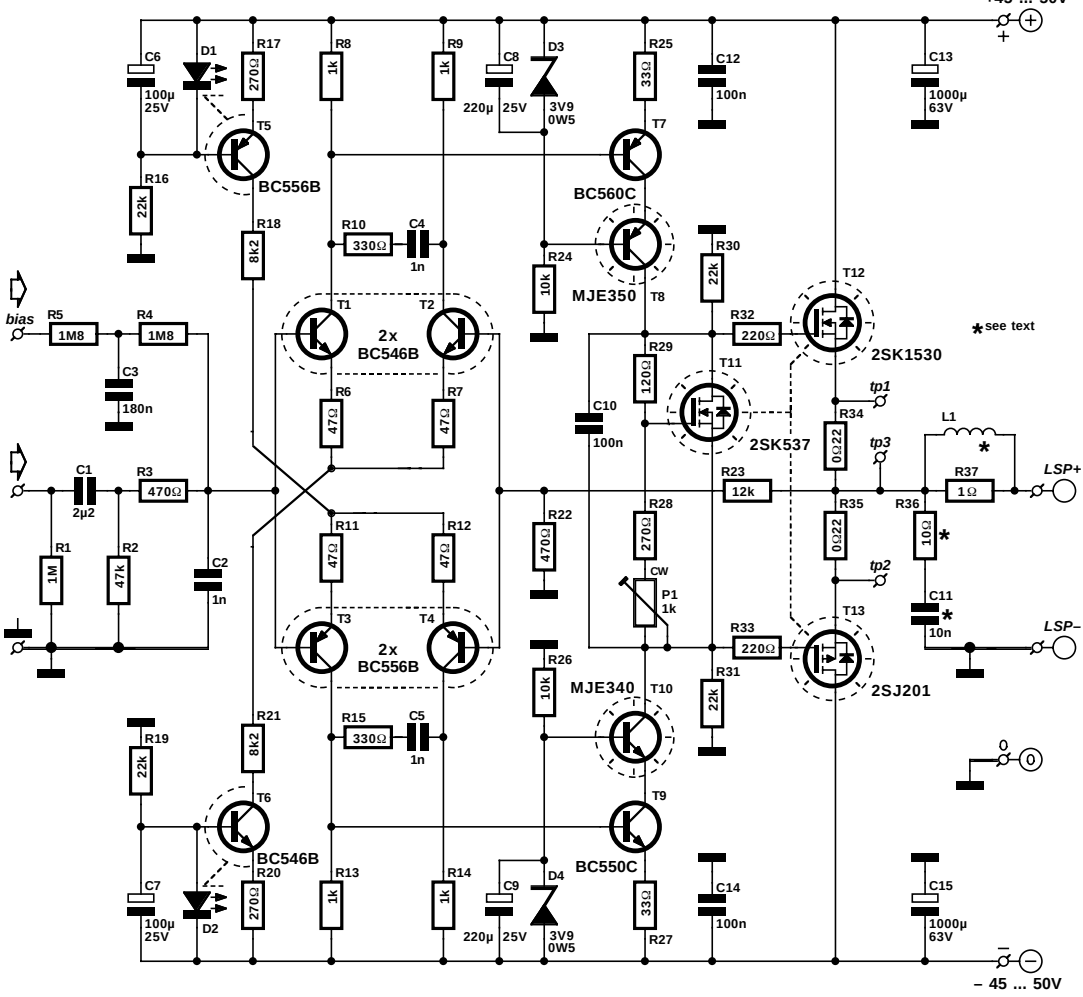
+45 ... 50V
C6
100µ
25V
D1
R17
270Ω
R8
1k
R9
1k
C8
220µ
25V
D3
3V9
0W5
R25
33Ω
C12
100n
C13
1000µ
63V
T5
BC556B
T7
BC560C
R16
22k
R18
8k2
R10
330Ω
C4
1n
R24
10k
MJE350
T8
R30
22k
T12
2SK1530
bias
R5
1M8
R4
1M8
T1
T2
2x
BC546B
R32
220Ω
*see text
C3
180n
R6
47Ω
R7
47Ω
R29
120Ω
T11
2SK537
C10
100n
tp1
R34
0Ω22
tp3
L1
*
C1
2µ2
R3
470Ω
R23
12k
R37
1Ω
LSP+
R1
1M
R2
47k
C2
1n
R11
47Ω
R12
47Ω
R22
470Ω
R28
270Ω
CW
P1
1k
R35
0Ω22
R36
10Ω
*
tp2
C11
10n
*
LSP–
T3
T4
2x
BC556B
R26
10k
MJE340
T10
R33
220Ω
T13
2SJ201
R31
22k
R21
8k2
R15
330Ω
C5
1n
R19
22k
T6
BC546B
T9
BC550C
C7
100µ
25V
D2
R20
270Ω
R13
1k
R14
1k
C9
220µ
25V
D4
3V9
0W5
R27
33Ω
C14
100n
C15
1000µ
63V
– 45 ... 50V
010001 - 11