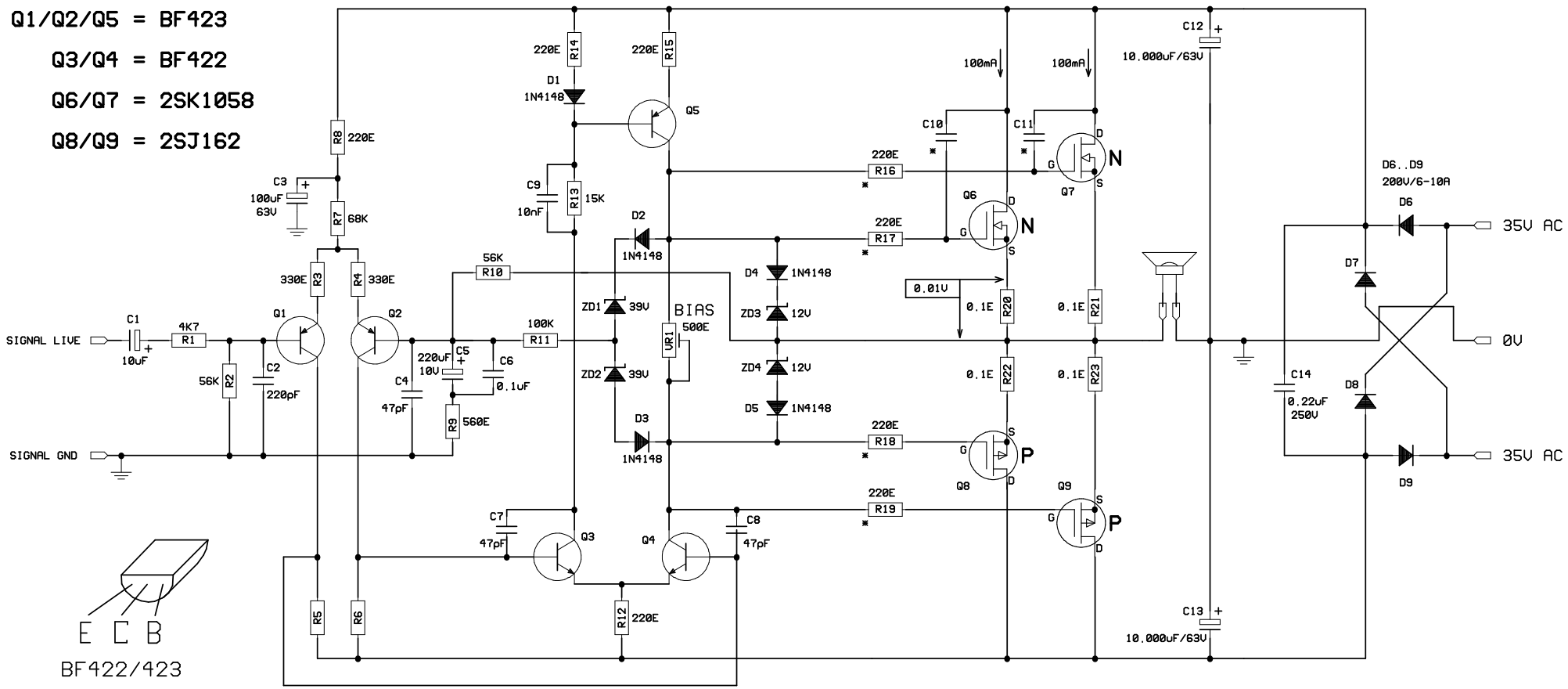

BUZMOS POWER AMPLIFIER

Designed by: Dr. Borivoje Jagodic