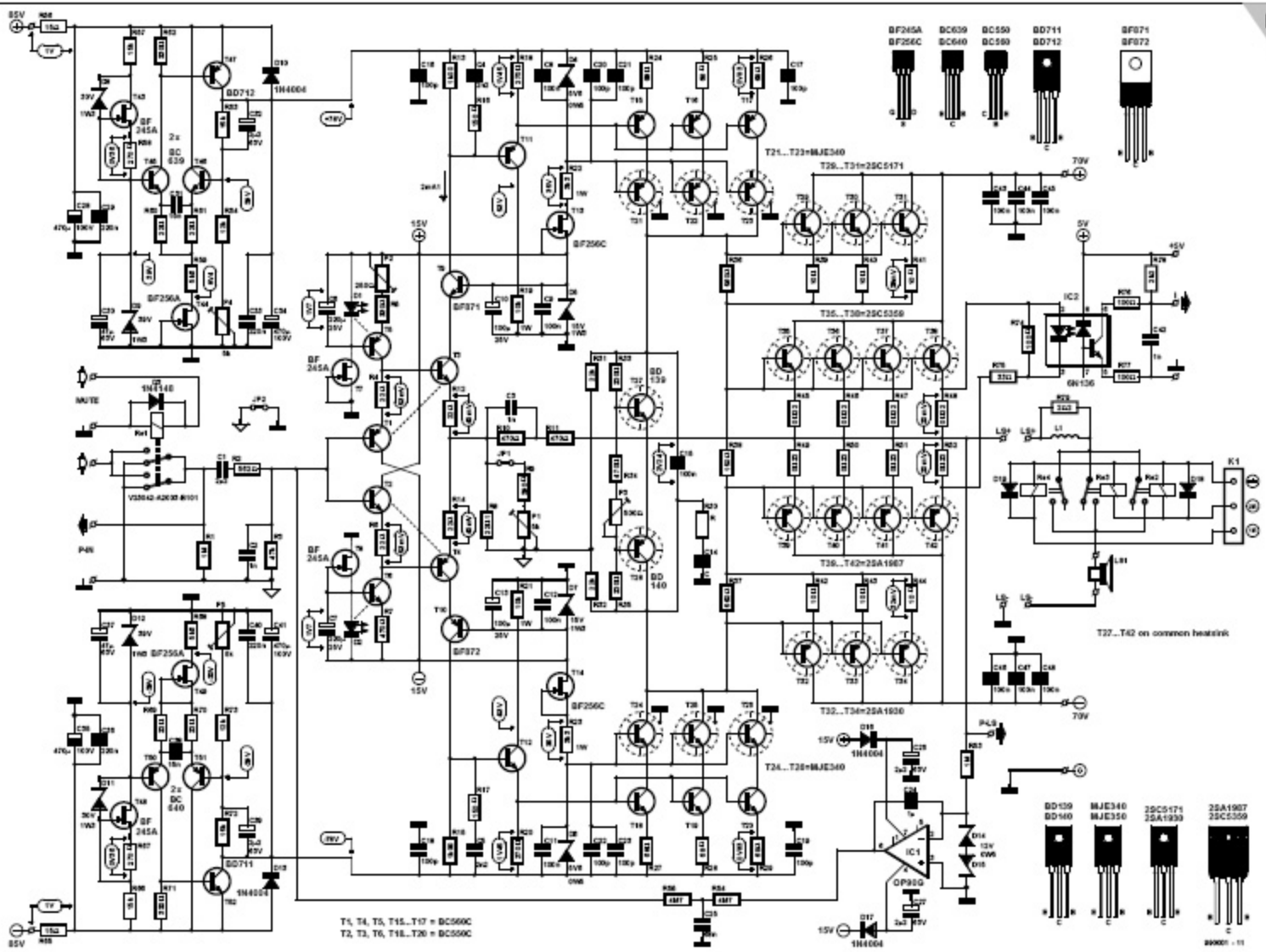
BF245A
BF256C
BC639
BC640
BC550
BC560
BD711
BD712
BF871
BF872
T21...T23=MJE340
T29...T31=2SC5171
T35...T38=2SC5359
T39...T42=2SA1987
T32...T34=2SA1930
T24...T28=MJE340
T27...T42 on common heatsink
BD139
BD140
MJE340
MJE350
2SC5171
2SA1930
2SA1987
2SC5359
IC1
OP90G
IC2
6N136
K1
MUTE
P4N
BF256A
BF256C
BF871
BF872
BD 139
BD 140
BD712
BD711
1N4004
1N4148
BF 245A
BC 639
BC 640
T1, T4, T5, T15...T17 = BC560C
T2, T3, T6, T18...T20 = BC550C