E MAIN CIRCUIT (P.C.Board:on pages 22,23)

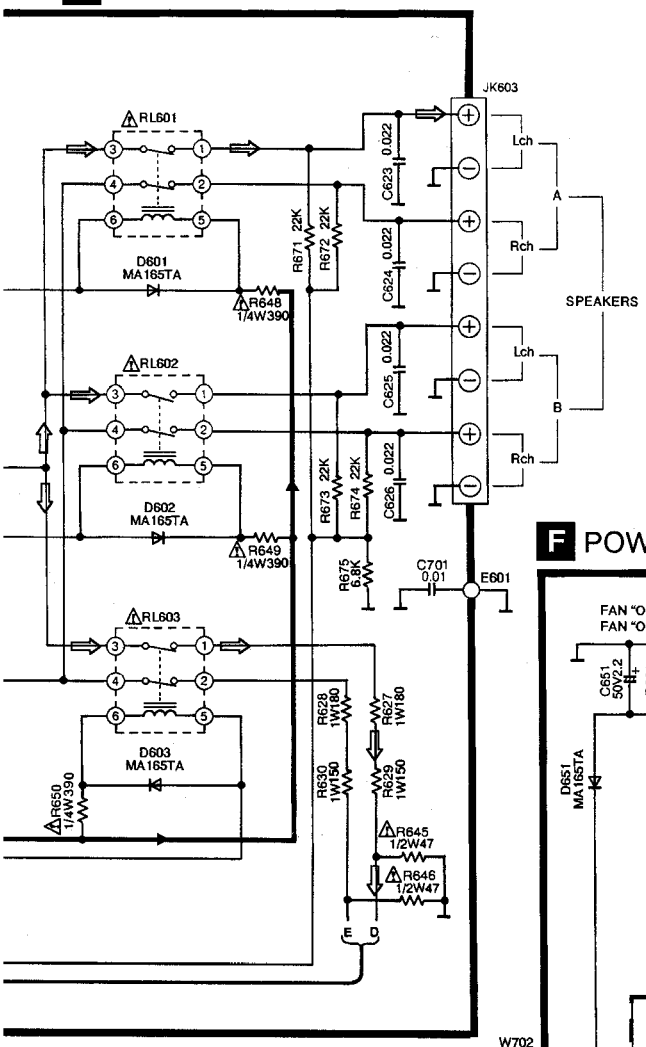

: Phono Signal (L-ch) Line
: Positive Voltage Line
: Negative Voltage Line

F POWER SUPPLY CIRCUIT (P.C.Board:on page 24)

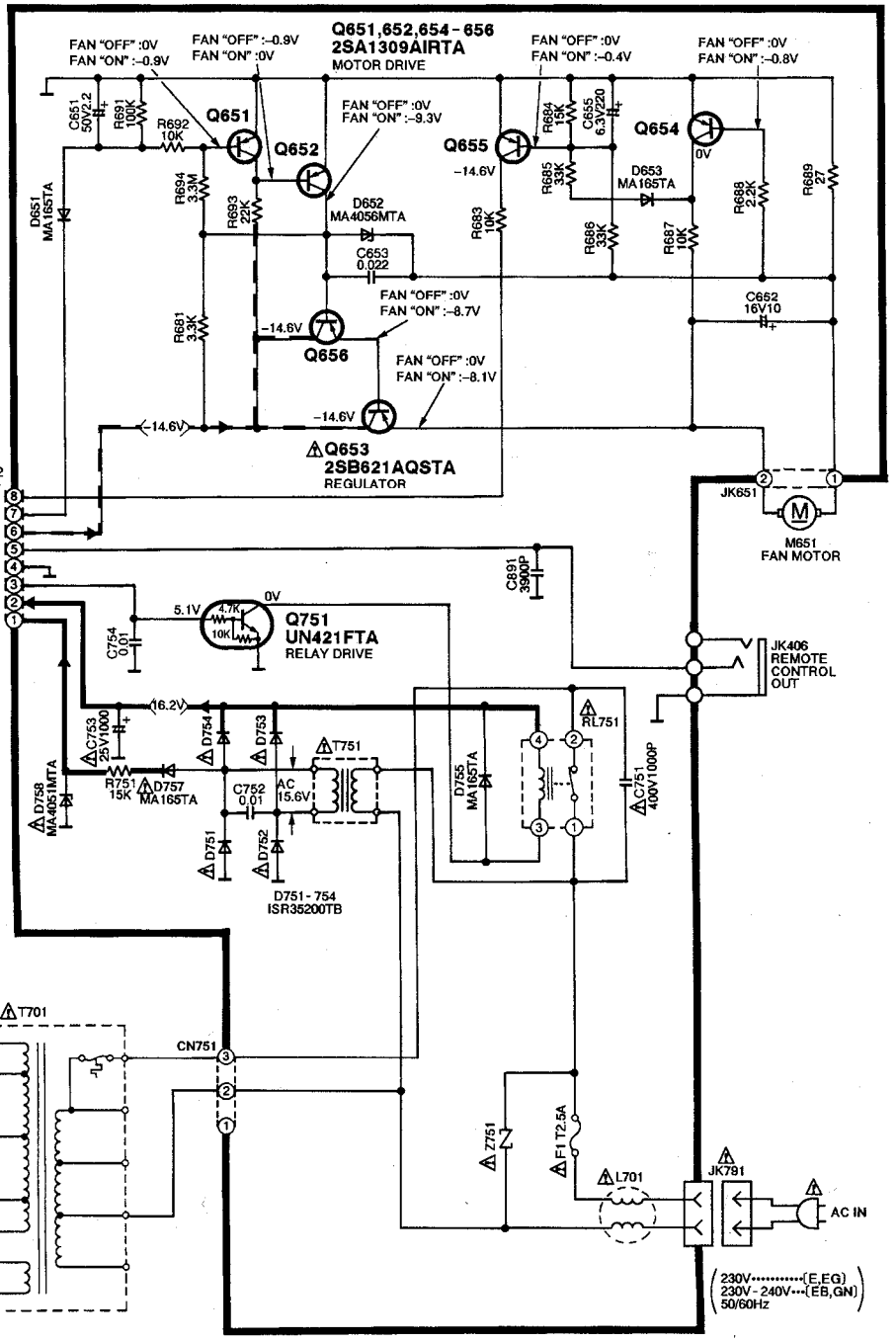
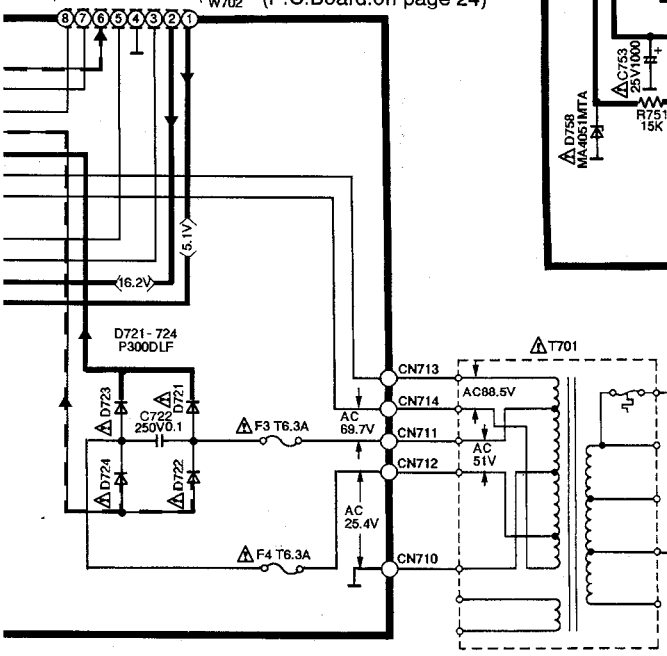
G POWER TRANSFORMER CIRCUIT (P.C.Board:on page 24)