Schaltbild
Circuit diagram

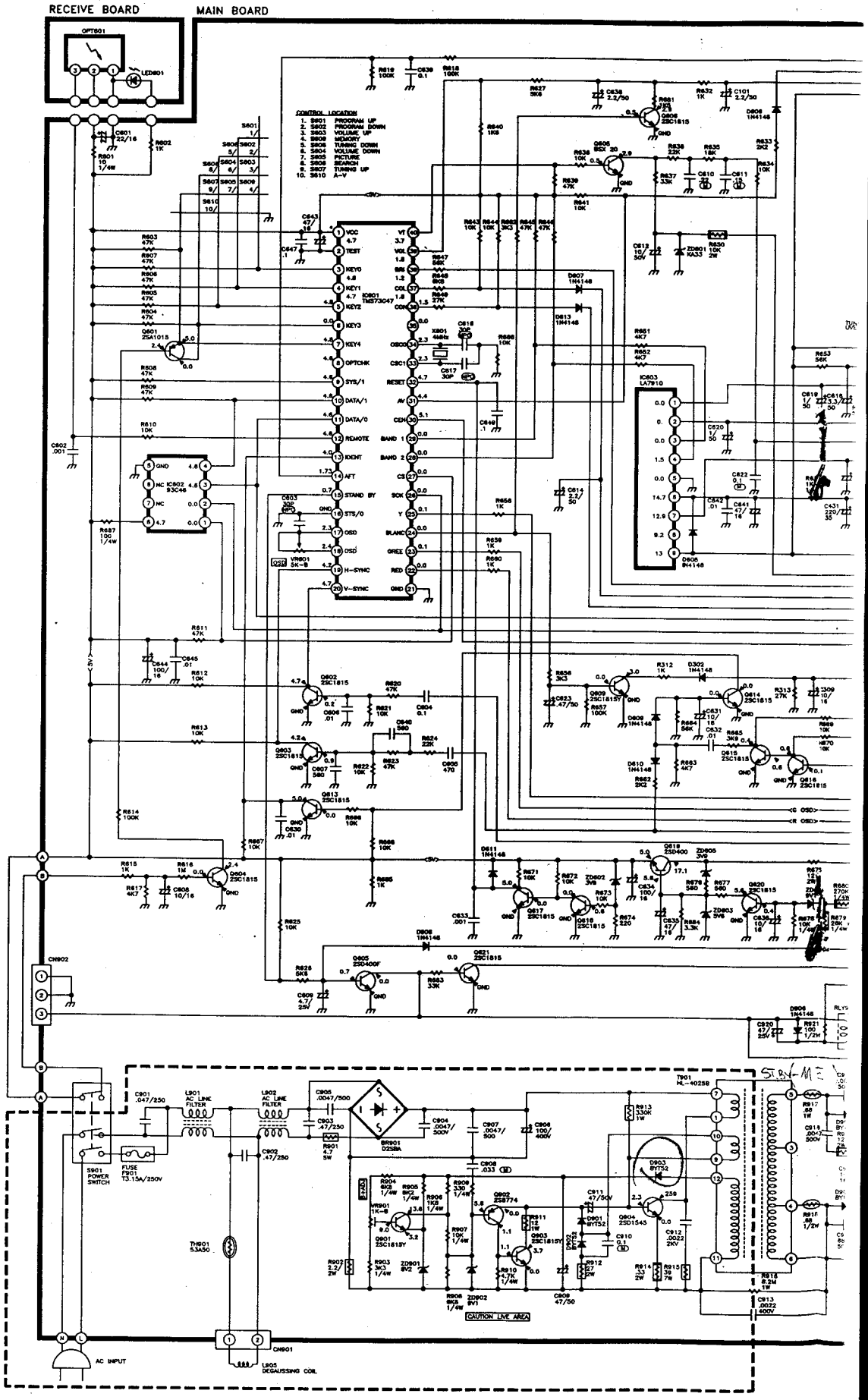

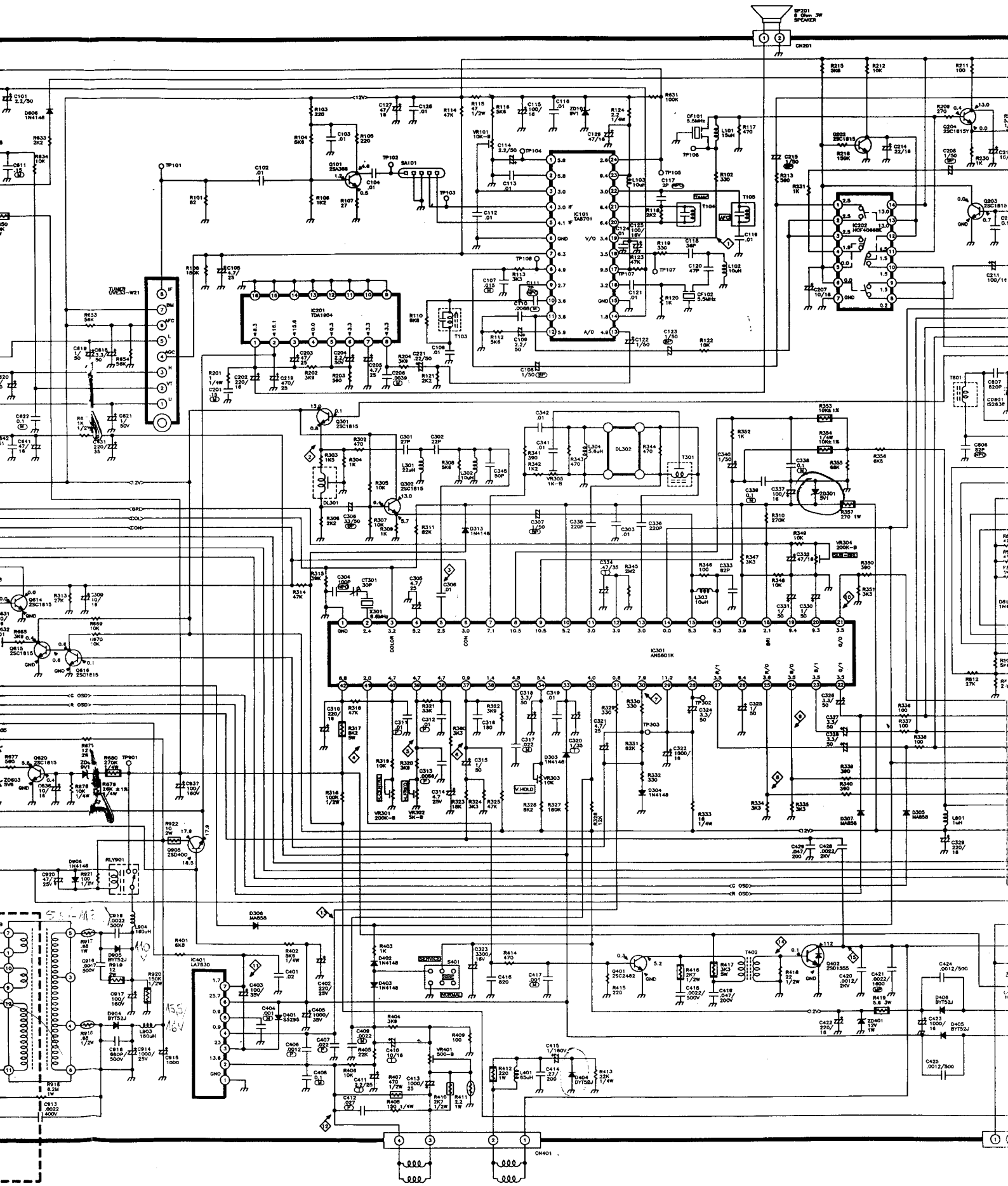
SP231
8 Ohm 3W
SPEAKER
CN201
IC101
TA8701
IC201
TDA1904
IC301
AN5601K
IC401
LA7830
IC302
HCF4066BE
TUNER
UV511-W21
CN401
V.
H.

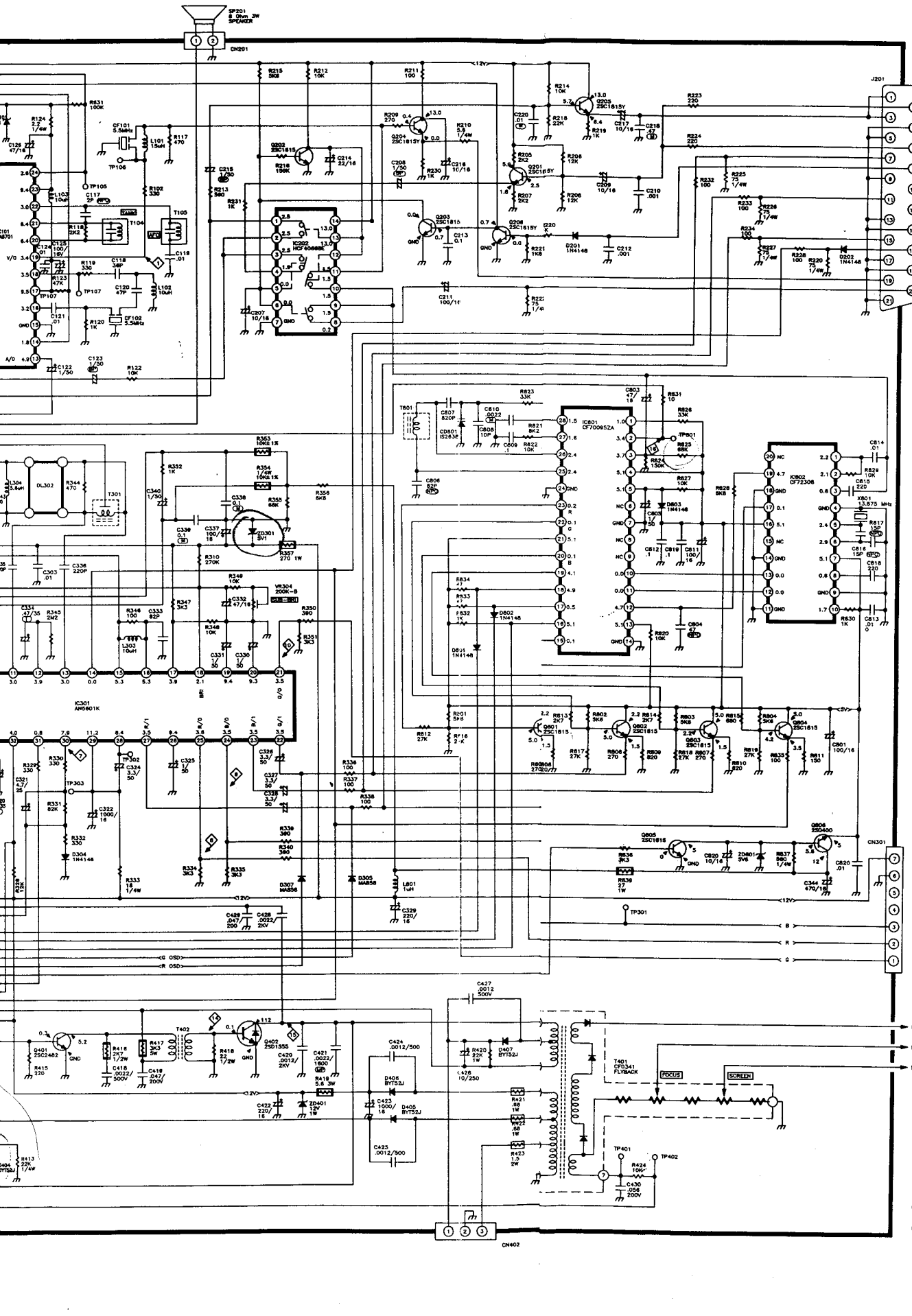

NOTE:

(1) ALL CAPACITORS ARE IN uF UNLESS OTHER
ALL CAPACITORS ARE 50wv UNLESS OTHER
(2) CAPACITOR NOT SPECIFICALLY DESIGNATED
CERAMIC CAPACITORS.
(3) ALL RESISTORS ARE IN OHM 1/16 WATT U
OTHERWISE NOTED.
(4) RESISTOR NOT SPECIFICALLY DESIGNATED A
FILM RESISTORS.
(5) DC VOLTAGE ARE MEASURED FROM POINTS
TO THE CIRCUIT GROUND WITH A DIGITAL
MULTIMETER TEST.
(6) WAVEFORMS ARE TAKEN WITH SETTING CON
A NORMAL CONDITIONS (COLOR PHILIPS F
(7) THIS CIRCUIT DIAGRAM IS SUBJECT TO CHA
WITHOUT PRIOR NOTICE.
(8) ⚠ SAFETY CRITICAL DEVICE.

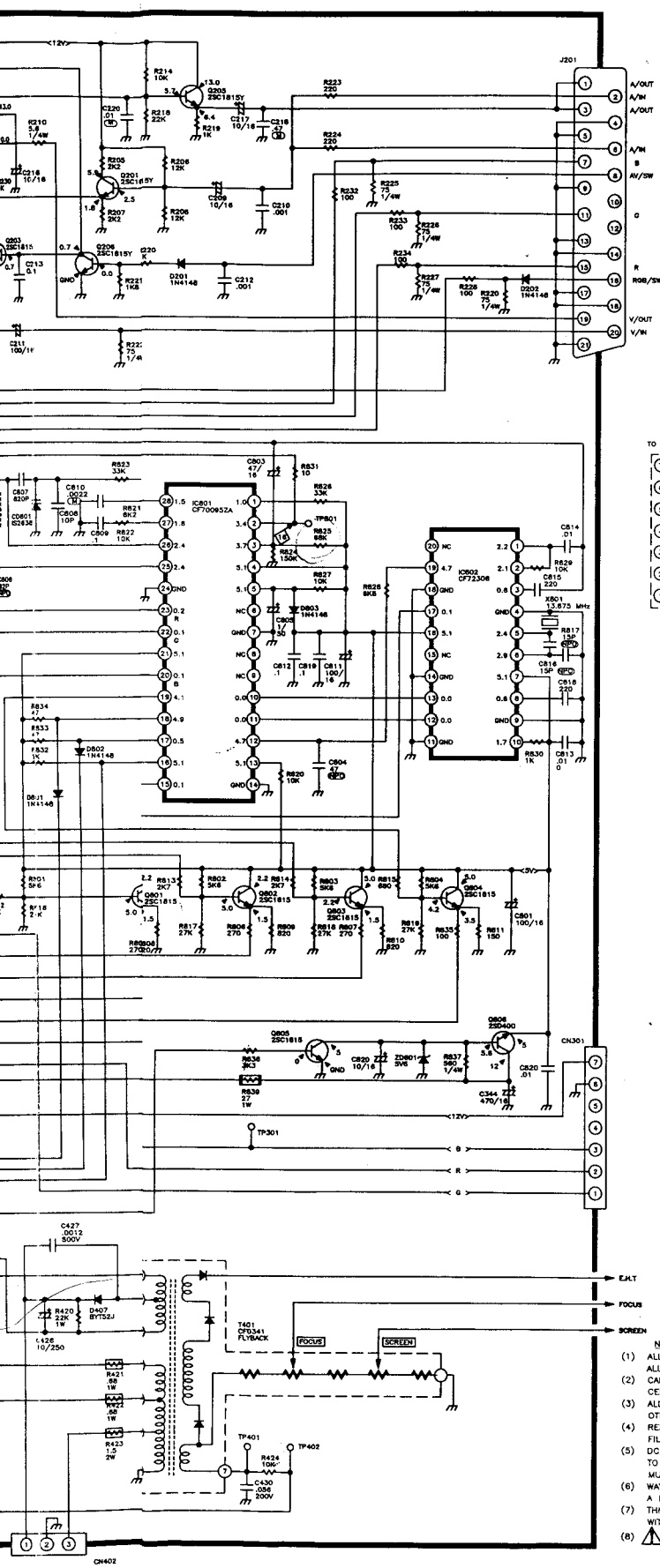

HANDSET BOARD

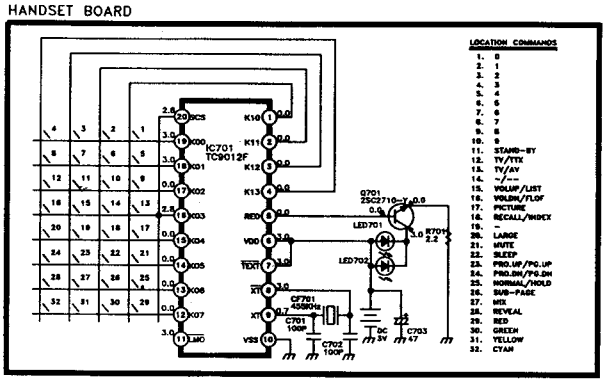

CRT BOARD

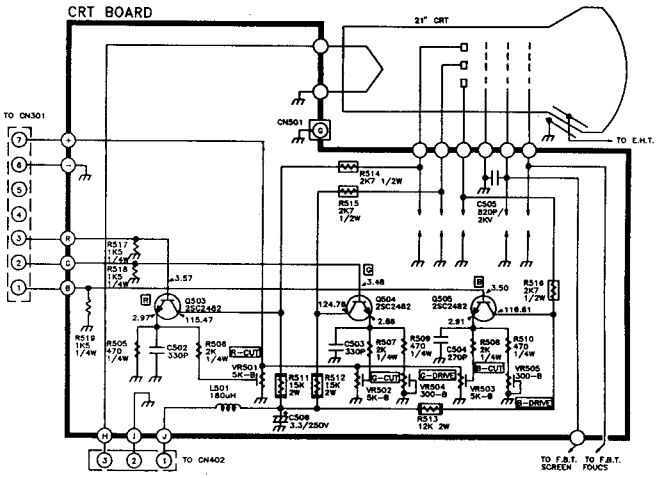

WAVEFORM

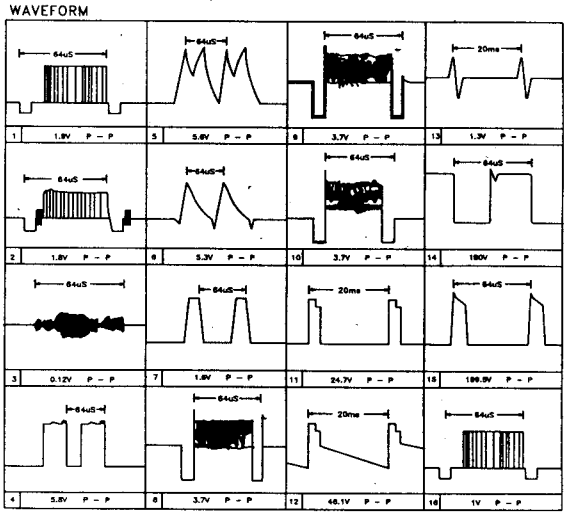

CIRCUIT SYMBOLS		
RESISTOR	CAPACITOR	
NONFLAMMABLE	ELECTROLYIC	POLYPROPYLENE
FUSEBLE	BI-POLAR ELECTROLYIC	MYLAR
CEMENT	TANTALUM	
METAL OXIDE	METALIZED POLYESTER	
THERMISTOR	POLYESTER FILM	

NOTE:

(1) ALL CAPACITORS ARE IN uF UNLESS OTHERWISE NOTED. ALL CAPACITORS ARE 50wv UNLESS OTHERWISE NOTED.
(2) CAPACITOR NOT SPECIFICALLY DESIGNATED ARE CERAMIC CAPACITORS.
(3) ALL RESISTORS ARE IN OHM 1/16 WATT UNLESS OTHERWISE NOTED.
(4) RESISTOR NOT SPECIFICALLY DESIGNATED ARE CARBON-FILM RESISTORS.
(5) DC VOLTAGE ARE MEASURED FROM POINTS INDICATED TO THE CIRCUIT GROUND WITH A DIGITAL MULTIMETER TEST.
(6) WAVEFORMS ARE TAKEN WITH SETTING CONTROLS TO A NORMAL CONDITIONS (COLOR PHILIPS PATTEN).
(7) THIS CIRCUIT DIAGRAM IS SUBJECT TO CHANGE WITHOUT PRIOR NOTICE.
(8) ⚠ SAFETY CRITICAL DEVICE.