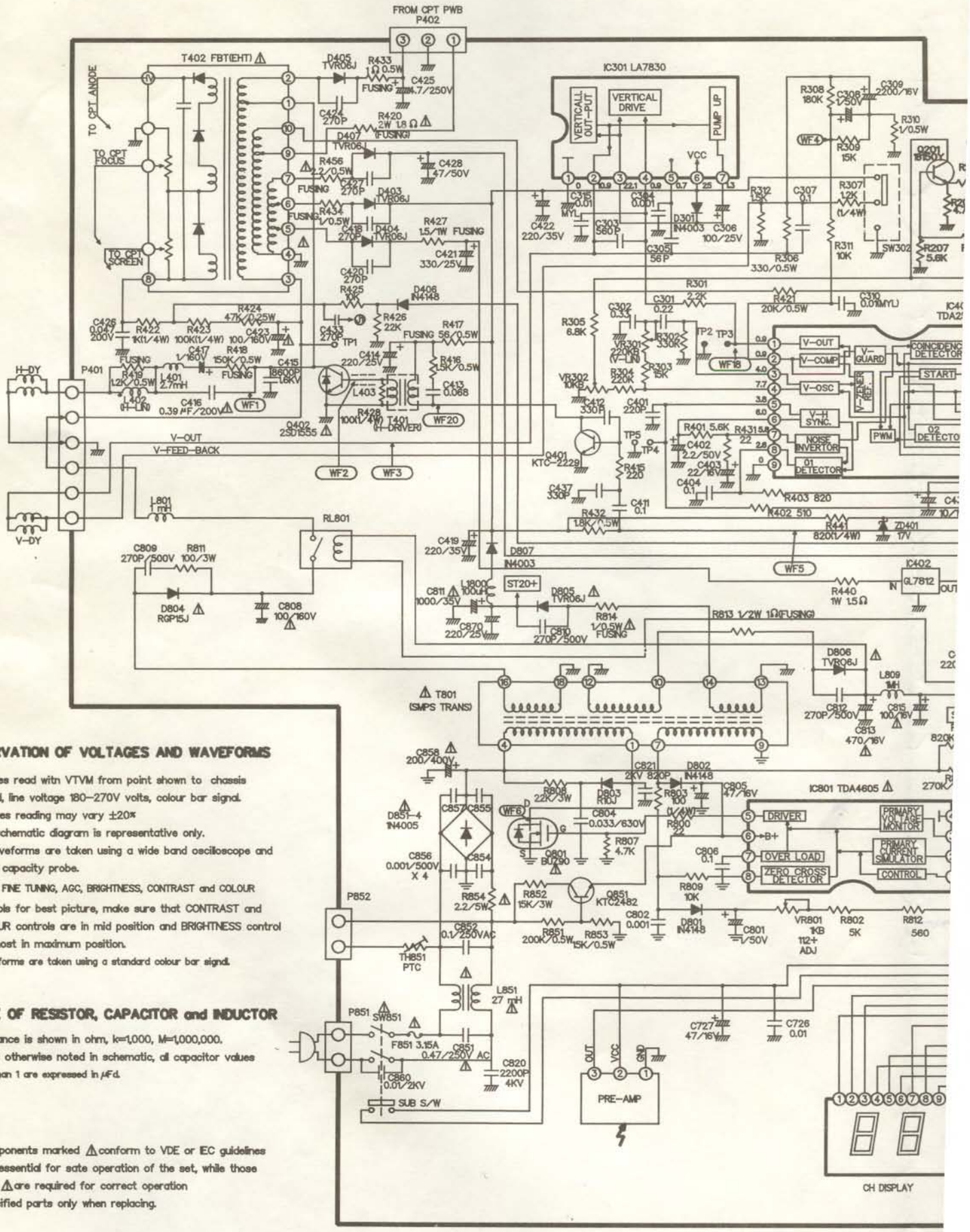

OBSERVATION OF VOLTAGES AND WAVEFORMS

1. Voltages read with VTVM from point shown to chassis ground, line voltage 180–270V volts, colour bar signal.
2. Voltages reading may vary ±20%
3. This schematic diagram is representative only.
4. All waveforms are taken using a wide band oscilloscope and a low capacity probe.
5. Check FINE TUNING, AGC, BRIGHTNESS, CONTRAST and COLOUR controls for best picture, make sure that CONTRAST and COLOUR controls are in mid position and BRIGHTNESS control is almost in maximum position.
6. Waveforms are taken using a standard colour bar signal.

VALUE OF RESISTOR, CAPACITOR and INDUCTOR

1. Resistance is shown in ohm, k=1,000, M=1,000,000.
2. Unless otherwise noted in schematic, all capacitor values less than 1 are expressed in μFd.

The components marked ⚠ conform to VDE or IEC guidelines and are essential for safe operation of the set, while those marked ⚠ are required for correct operation
Use specified parts only when replacing.

CIRCUIT DIAGRAM PC91A

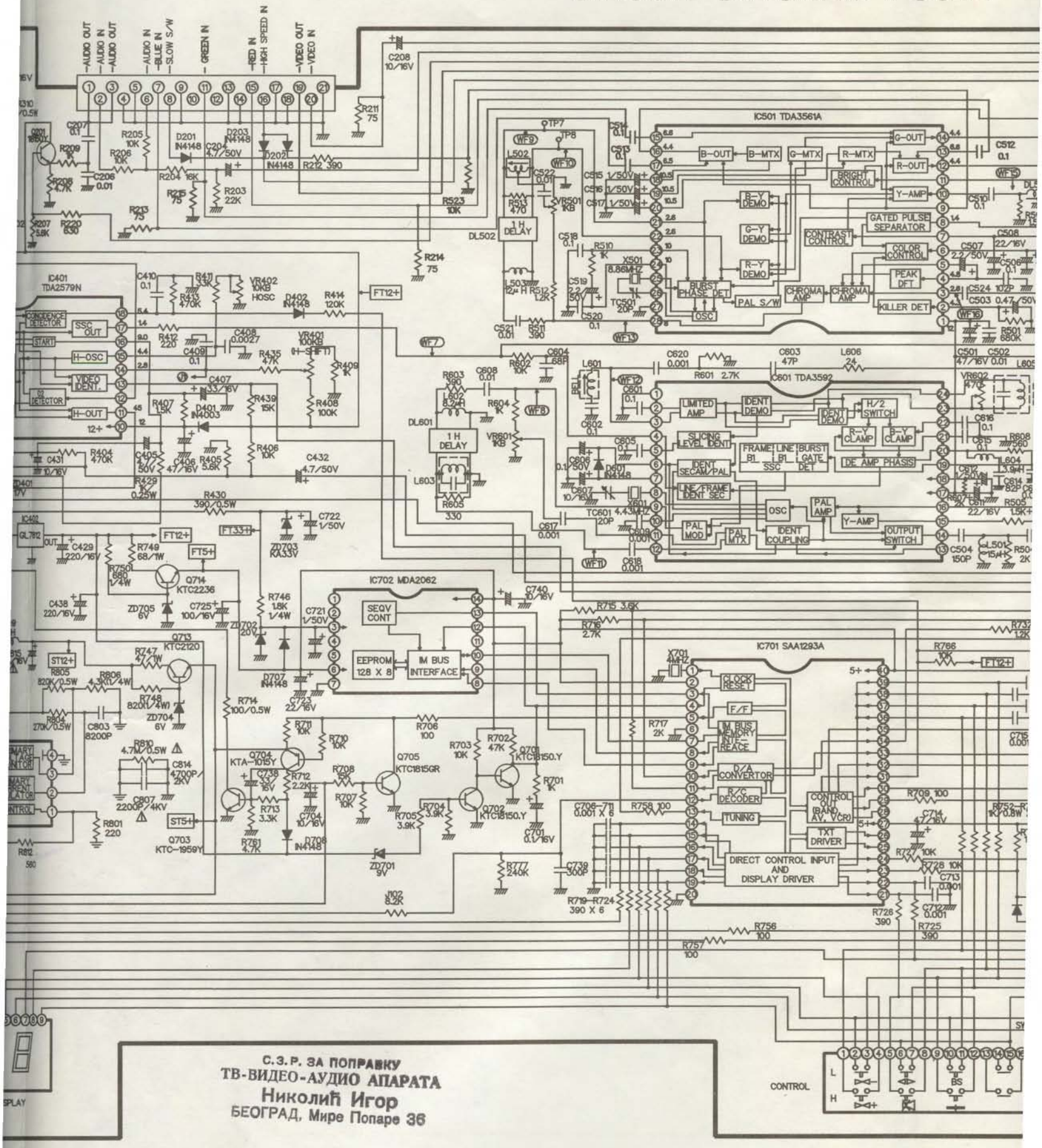

С.З.Р. ЗА ПОПРАВКУ
ТВ-ВИДЕО-АУДИО АПАРАТА
Николић Игор
БЕОГРАД, Мире Попаре 36

RAM PC91A

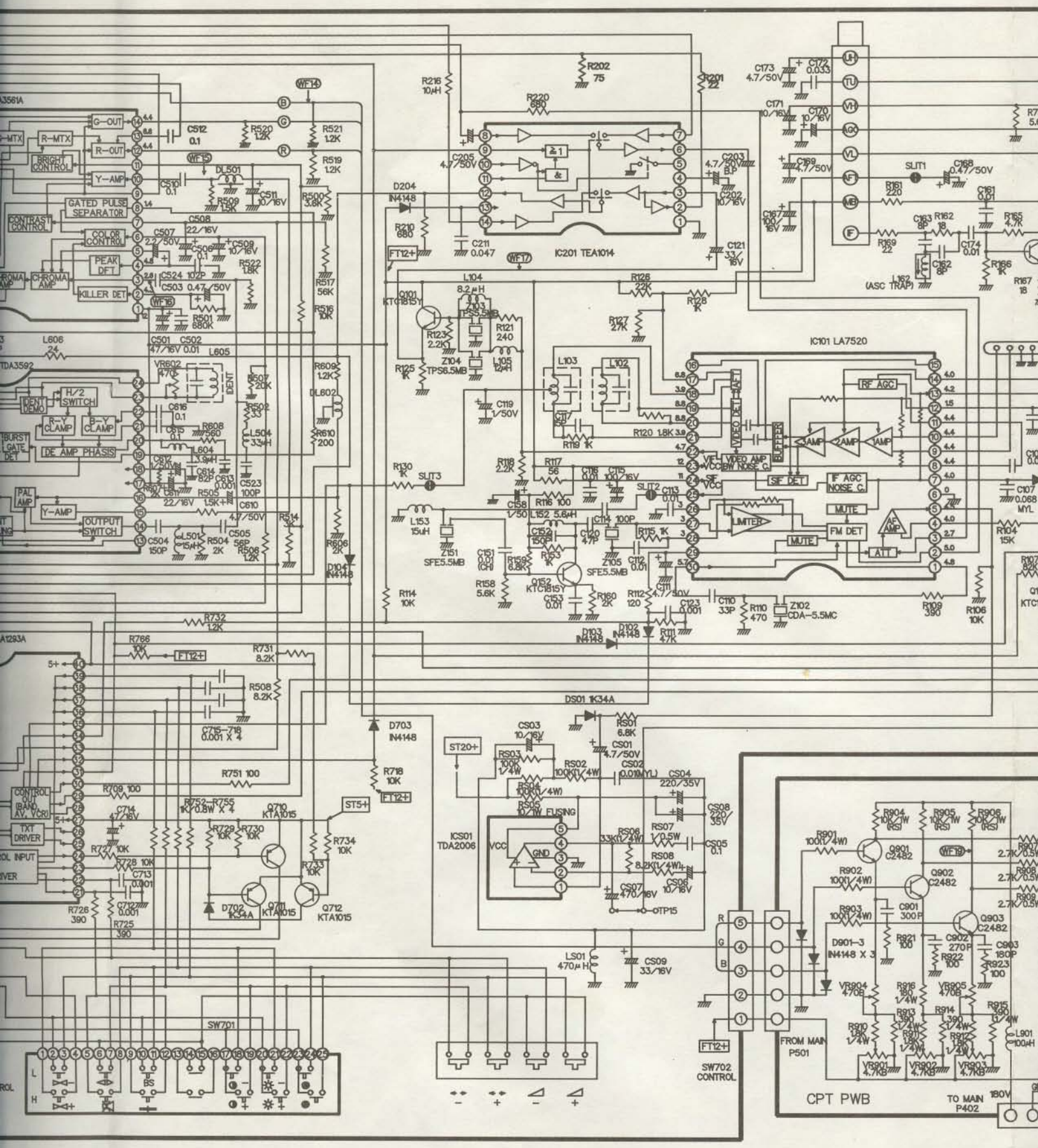
IC201 TEA1014
IC101 LA7520
TDA3592
TDA2006
CPT PWB
FROM MAIN P501
TO MAIN P402
SW702 CONTROL
SW701
G-OUT
R-MTX
R-OUT
BRIGHT CONTROL
Y-AMP
GATED PULSE SEPARATOR
CONTRAST CONTROL
COLOR CONTROL
PEAK DET
CHROMA AMP
KILLER DET
H/2 SWITCH
R-Y CLAMP
B-Y CLAMP
DE AMP PHASIS
PAL AMP
OUTPUT SWITCH
CONTROL OUT (BAND, AV, VCR)
TXT DRIVER
VIDEO DET
VIDEO AMP
BUFFER
RF AGC
IF AGC NOISE C.
SIF DET
MUTE
FM DET
LIMITER
AF AMP
ATT
(ASC TRAP)
FUSING
OTP15

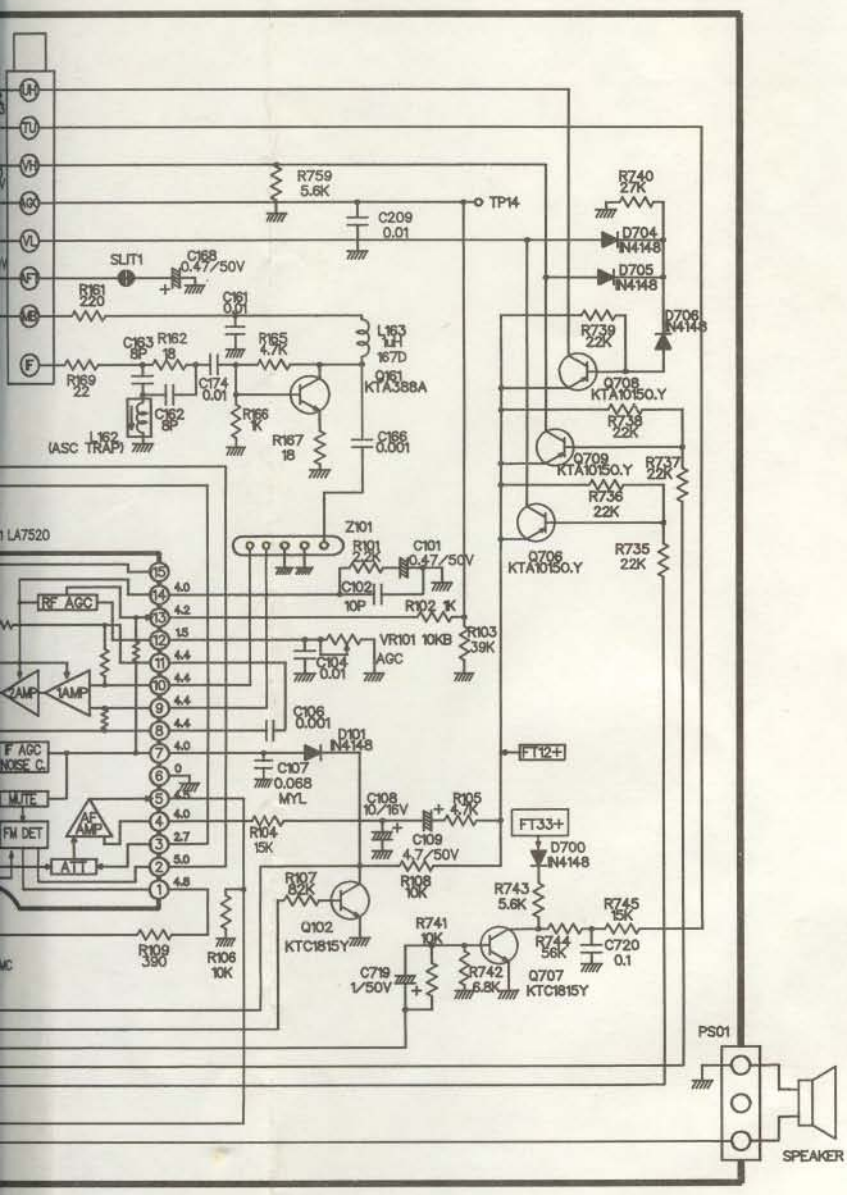

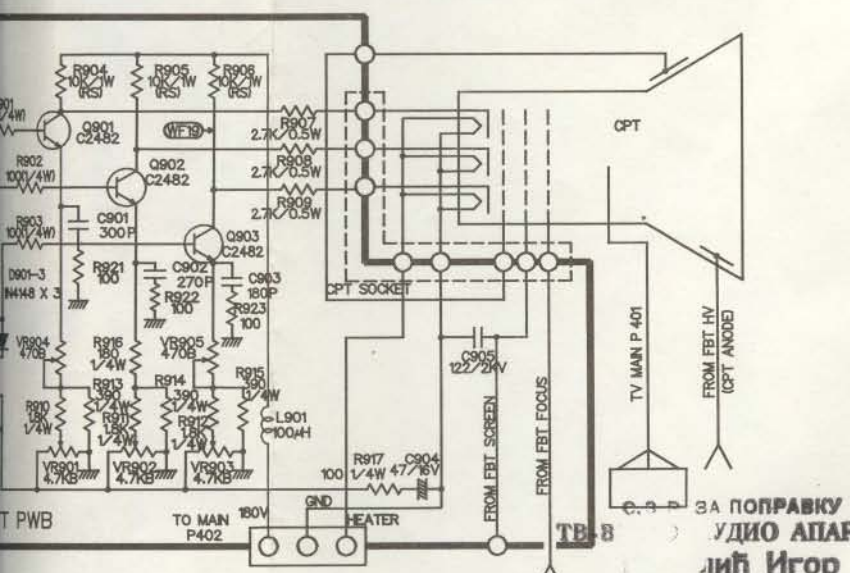

NOTICE

Since this is basic circuit diagram,
the value of components and some partial connection
are subject to be changed for improvement.

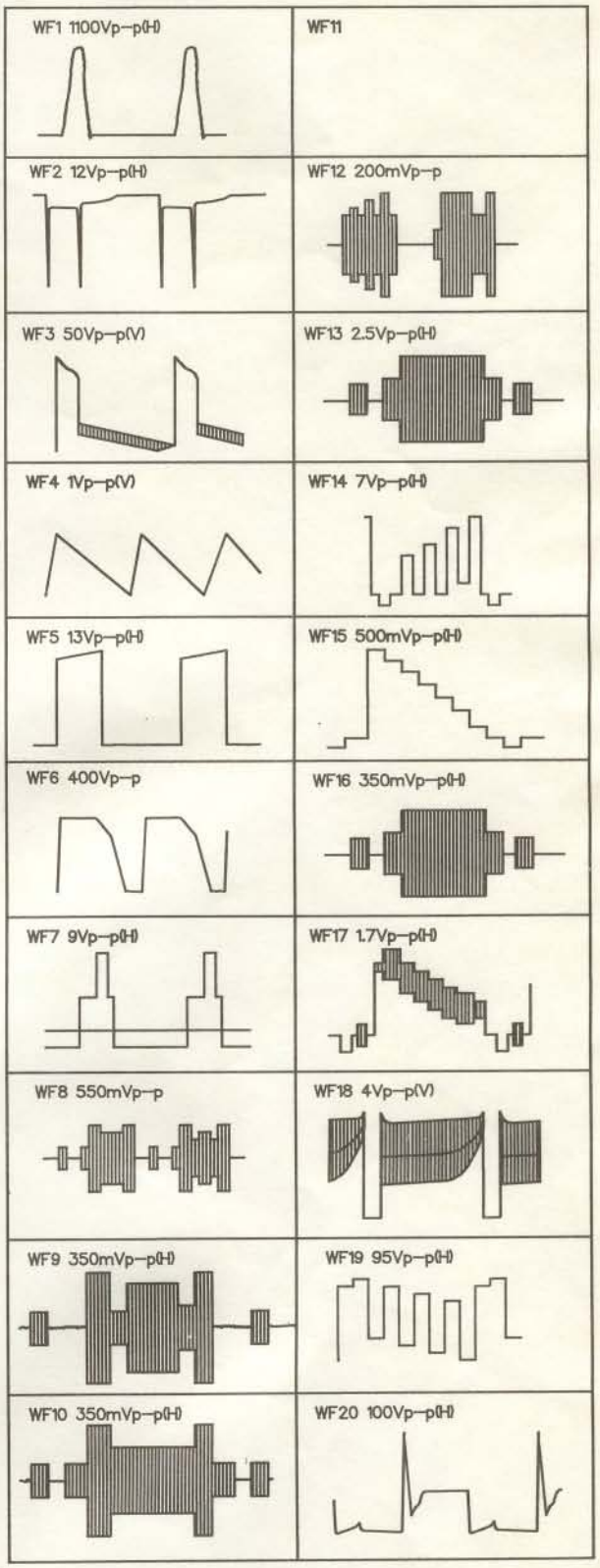

ЗА ПОПРАВКУ
УДИО АПАРАТА
лић Игор
БЕОГРАД, Мире Попаре 36

P / N : 484-721A

MODEL : CBT-9742EBPGRG

CBT-9745EBPGRG