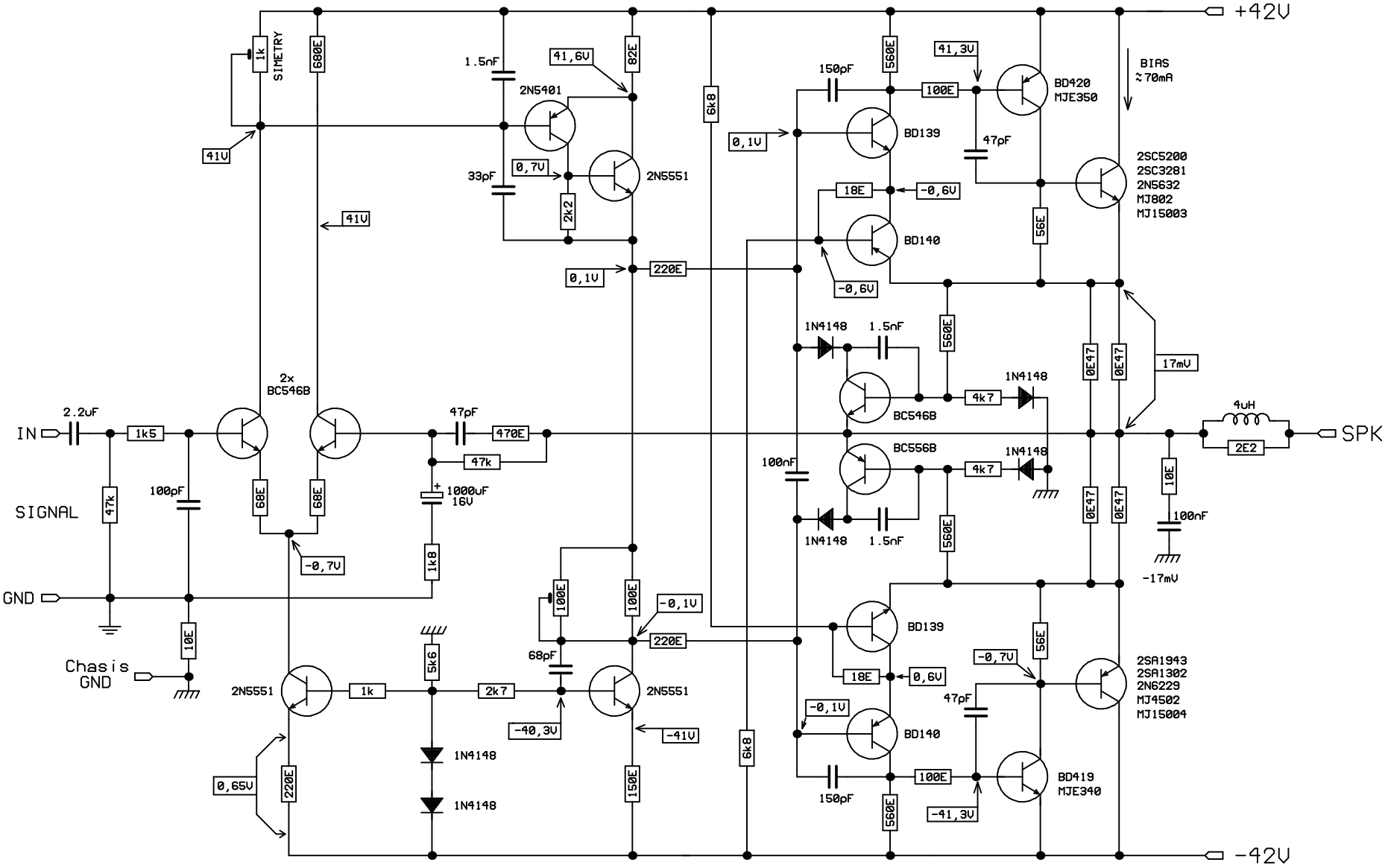

STUDIO

Designed by Dr.Borivoje Jagodic

www.bas.abshost.net