■ RX-496RDS SCHEMATIC DIAGRAM (TUNER)

Each voltage given here represents that in the FM (98. 1MHz, STEREO) reception mode but the one in the parentheses ( ) is measured in the AM (1080kHz, MAN'L) reception mode.

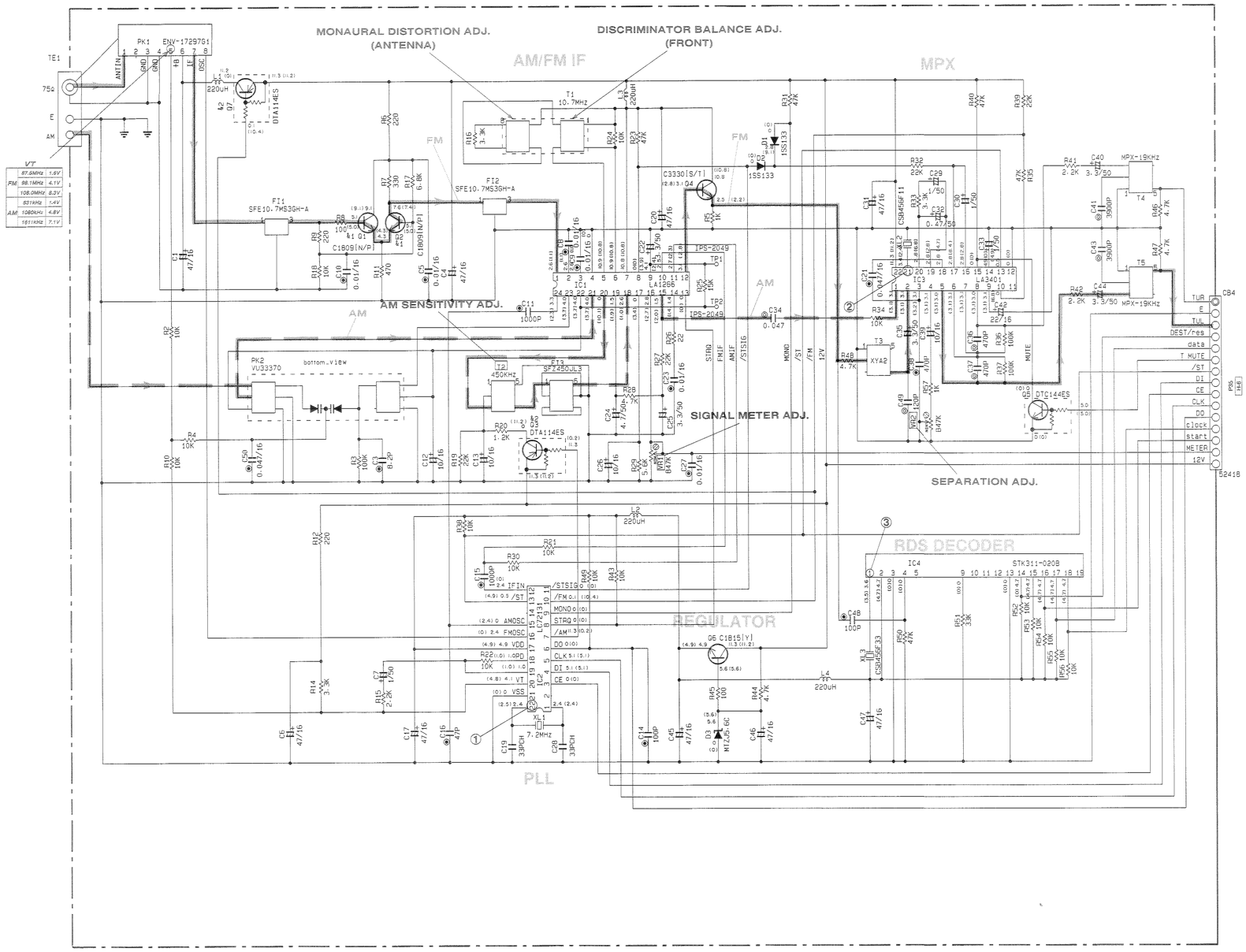

CAPACITOR

REMARKS	PARTS NAME	
NO MARK	ELECTROLYTIC CAPACITOR	ZZ
⊗	TANTALUM CAPACITOR	ZZ
NO MARK	CERAMIC CAPACITOR	‖
◉	CERAMIC TUBULAR CAPACITOR	‖
◎	POLYESTER FILM CAPACITOR	‖
○	POLYSTYRENE FILM CAPACITOR	‖
ⓘ	MICA CAPACITOR	‖
ⓟ	POLYPROPYLENE FILM CAPACITOR	‖
▣	SEMICONDUCTIVE CERAMIC CAPACITOR	‖

RESISTOR

REMARKS	PARTS NAME
NO MARK	CARBON FILM RESISTOR (P=5)
▨	CARBON FILM RESISTOR (P=10)
△	METAL OXIDE FILM RESISTOR
⚠	METAL FILM RESISTOR
⊠	METAL PLATE RESISTOR
◪	FIRE PROOF CARBON FILM RESISTOR
□	CEMENT MOLDED RESISTOR
⊘	SEMI VARIABLE RESISTOR
▤	CHIP RESISTOR

NOTICE (model)
(J)····· JAPANESE
(U)····· U. S. A
(C)····· CANADIAN
(R)····· GENERAL
(A)····· AUSTRALIAN
(B)····· BRITISH
(G)····· EUROPEAN
(T)····· CHINA
(L)····· SINGAPORE

Interchangeable Parts at Manufacture-Stage

Mark	Reference Parts Number	Parts Name
★1	Q1.2	2SC1809(N/P) 2SC1809S(N/P)
★2	Q3.7	DTA114ES UN4111

IC1 : LA1266
AM/FM IF

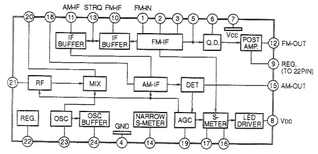

IC3 : LA3401
MPX

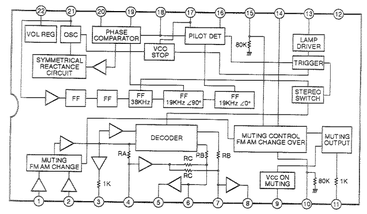

IC2 : LC72131
PLL Controller

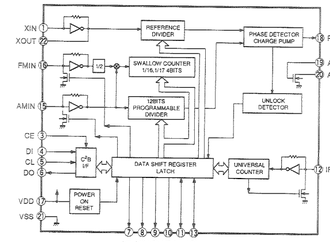

IC4 : STK311-020B
RDS Decoder & Controller

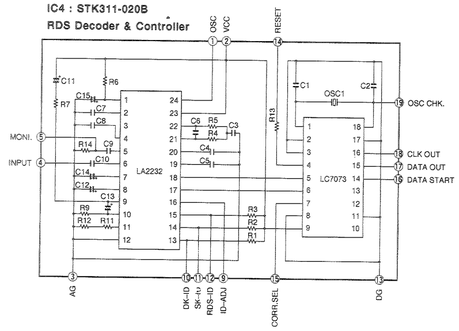

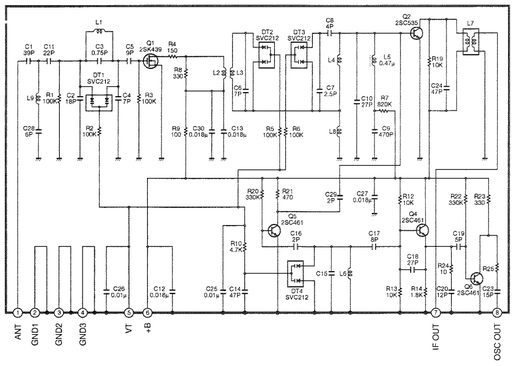

Point ① (Pin22 of IC2) FM reception
V : 2V/div H : 50 nsec/div
DC range 1 : 1 probe

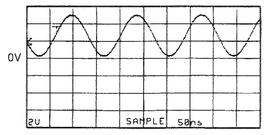

Point ② (Pin21 of IC3)
V : 2V/div H : 1 μsec/div
DC range 1 : 1 probe

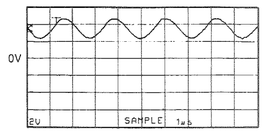

Point ③ (Pin1 of IC4)
V : 2V/div H : 1 μsec/div
DC range 1 : 1 probe

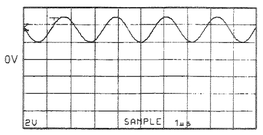

* All voltages are measured with a 10MΩ/DC electric volt meter.
* Components having special characteristics are marked ⚠ and must be replaced with parts having specifications equal to those originally installed.
* Schematic diagram is subject to change without notice.